Parts Manual

Mfg. No: 5901753

Pathfinder XC (FS2200) Series Stand-On Spreader Sprayer

Copyright © Briggs & Stratton. All Rights reserved

20-May-2024

5106065 - Salt Spreader Baffle, 220# (SPB-220-2). . . . . .
5105895 - Spray Wand Assembly (SPW-100-1). . . . . .

Not For Reproduction

Copyright © Briggs & Stratton. All Rights reserved

Model Components

Page

Decals Group. 4
Electrical Group. 6
Electrical Schematic. 8
Fuel Tank and Mount Group. 10
Handlebar Group. 12
Hopper Gate Assembly Group (220 LBS). 14
Hopper Group (220 LBS). 16
Main Frame Group. 18
Operator Platform Group. 20
Parking Brake Group. 22
Power Transmission Group. 24
Pump and Gearbox Group. 28
Spray System Group. 30
Spray Tank Group. 32
Spreader Shield Group. 34
Torque Specification Chart. 36

Not For Reproduction

Copyright © Briggs & Stratton. All Rights reserved

1

3

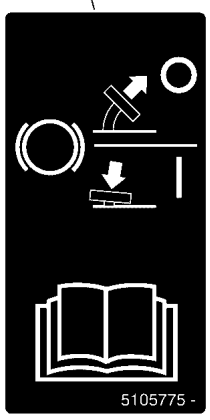

5

⚠ WARNING

Amputation and Pinch Point Hazard
To avoid injury from rotating parts, stay clear of parts and keep all shields and guards in place.

5103184

6

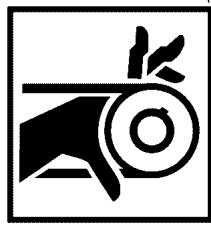

⚠ WARNING

If you can read this sign, a guard has been removed.

Do NOT operate with guard removed.

4

R N 1 2

7

⚠ CAUTION

TO AVOID FLOODING THE CYLINDER CLOSE FUEL SHUT-OFF VALVE WHILE TRANSPORTING AND TIPPING MACHINE.

8

⚠ WARNING

TO AVOID SERIOUS BODILY INJURY AND TRANSMISSION DAMAGE, THE MACHINE MUST BE AT A COMPLETE STOP BEFORE SHIFTING GEARS.

14

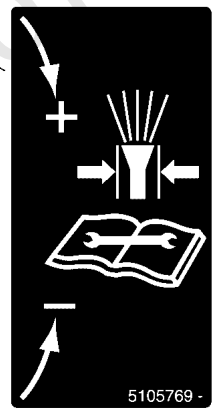

9

⚠ CAUTION

MUFFLER AND SHIELDS MAY EXCEED 150°F

2

⚠ WARNING

To avoid serious injury or death:

- Read and understand the operator's manual before using this machine.
- Do NOT operate unless trained to safely use this machine.
- Hearing protection is recommended.
- Do NOT operate without shields, guards, and safety devices in place and working.
- Do NOT defeat the safety system.
- Stop engine and remove key before adjusting, servicing or cleaning machine.
- Do NOT operate when people and pets are in the area.
- Do NOT carry passengers.
- Look behind and to the side before changing directions.
- Before leaving the operator's position engage park brake and stop engine.

⚠ DANGER

Loss of Control:
Operating on slopes can be hazardous and cause loss of control.
- Avoid sudden turns or rapid speed changes.
- Go up and down slopes, NOT across.
- Reduce speed and use extreme caution on slopes.
- If machine stops forward motion on a slope, stop. Get off and walk the machine slowly off the slope.
- Do NOT operate on slopes when grass is wet.

Caustic Liquid/Chemical Burn and Gases Inhalation Hazard:
- Follow instructions for handling and wear all personal protective equipment as recommended on the manufacturer's label of any herbicides, pesticides, or other chemicals used.

Thrown Object Hazard
- Do NOT operate when people are nearby.

5105774

10 11

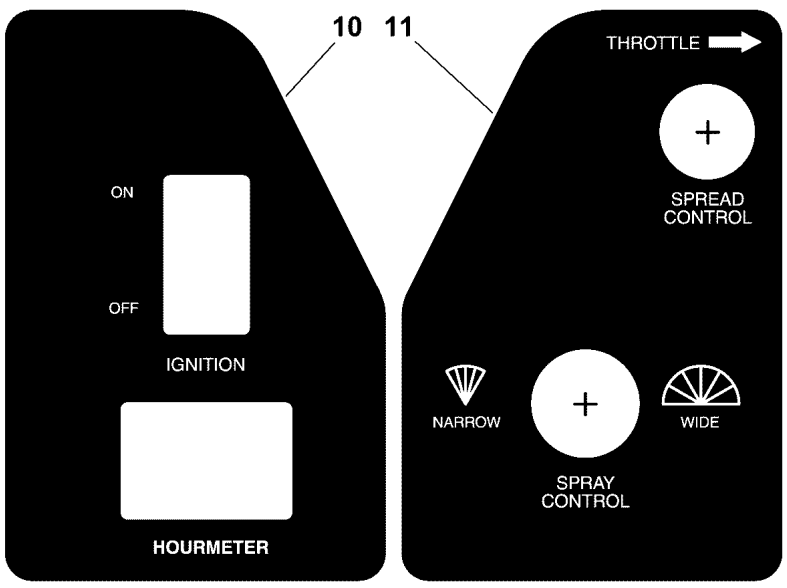

13

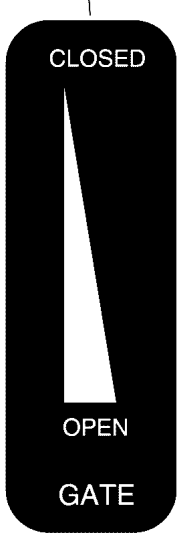

12

Not for Reproduction

Decals Group

REF NO	PART NO	QTY	DESCRIPTION
1	5102628	1	DECAL, PARKING BRAKE SYMBOLS
2	5105774	1	DECAL, WARNING / DANGER
3	5105775	1	DECAL, BRAKE PEDAL
4	5106500	1	DECAL, GEAR SELECTOR
5	5103184	3	DECAL, WARNING, HAND IN BELT, ENG ONLY
6	5106504	1	DECAL, WARNING, GUARD
7	5106505	1	DECAL, CAUTION, FLOODING
8	5106506	1	DECAL, WARNING, INJURY & TRANS. DAMAGE
9	5106507	1	DECAL, CAUTION, MUFFLER TEMP.
10	5106520	1	DECAL, PATHFINDER LEFT CONSOLE
11	5106521	1	DECAL, PATHFINDER RIGHT CONSOLE
12	5106542	1	DECAL, 3.00" FERRIS SHIELD LOGO
13	5106522	1	DECAL, PATHFINDER GATE LEVER
14	5105769	1	DECAL, COMBO SPRAY CONTROL

Not For Reproduction

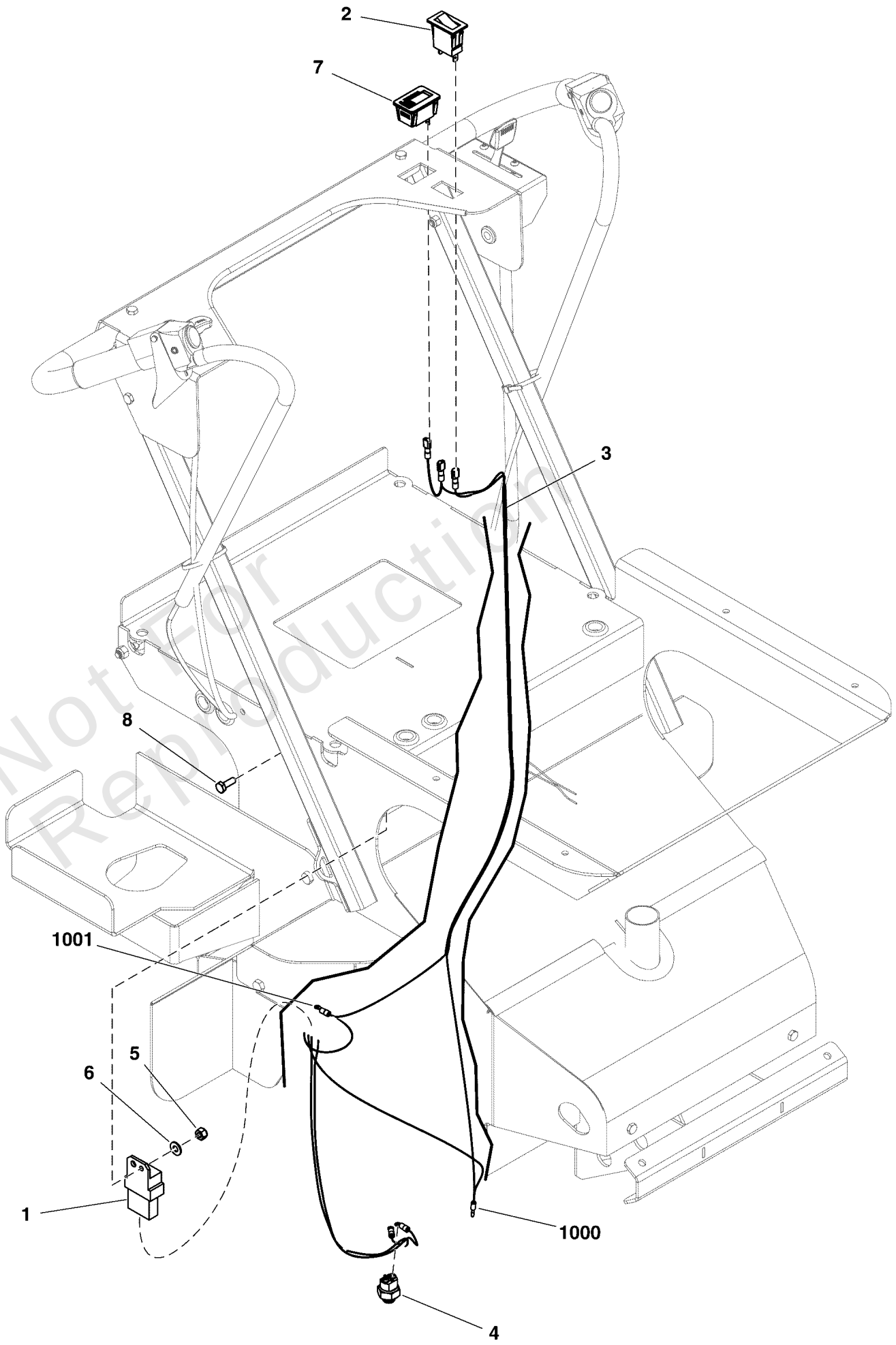

Not For Reproduction

Electrical Group

REF NO	PART NO	QTY	DESCRIPTION
1	5105937	1	MODULE, SAFE-START
2	5105945	1	SWITCH, ROCKER ON/OFF
3	5106455	1	HARNESS, WIRING ROVER/ROVER XC
4	5106017	1	PEERLESS NEUTRAL START SWITCH -(Connects to the transmission)
5	5106040	1	NUT-HEX-NYLK, .250"-20 SS188
6	5106067	1	WSHR-STL, FLT .281" X .625" X .050" IS SS188
7	5106145	1	METER, TACH/HOUR INDUCTIVE PICKUP
8	5106214	1	SCR-CAP, HEX .250"-20 X .750" SS188
1000	-----	0	Connects to Engine Ground
1001	-----	0	Connects to Engine Magneto

Not For Reproduction

5106455 MAIN WIRE HARNESS

5106455A

(If internal schematic of the switch is not shown, the image of the switch represents the back view of the connector as it is connected to the switch.)

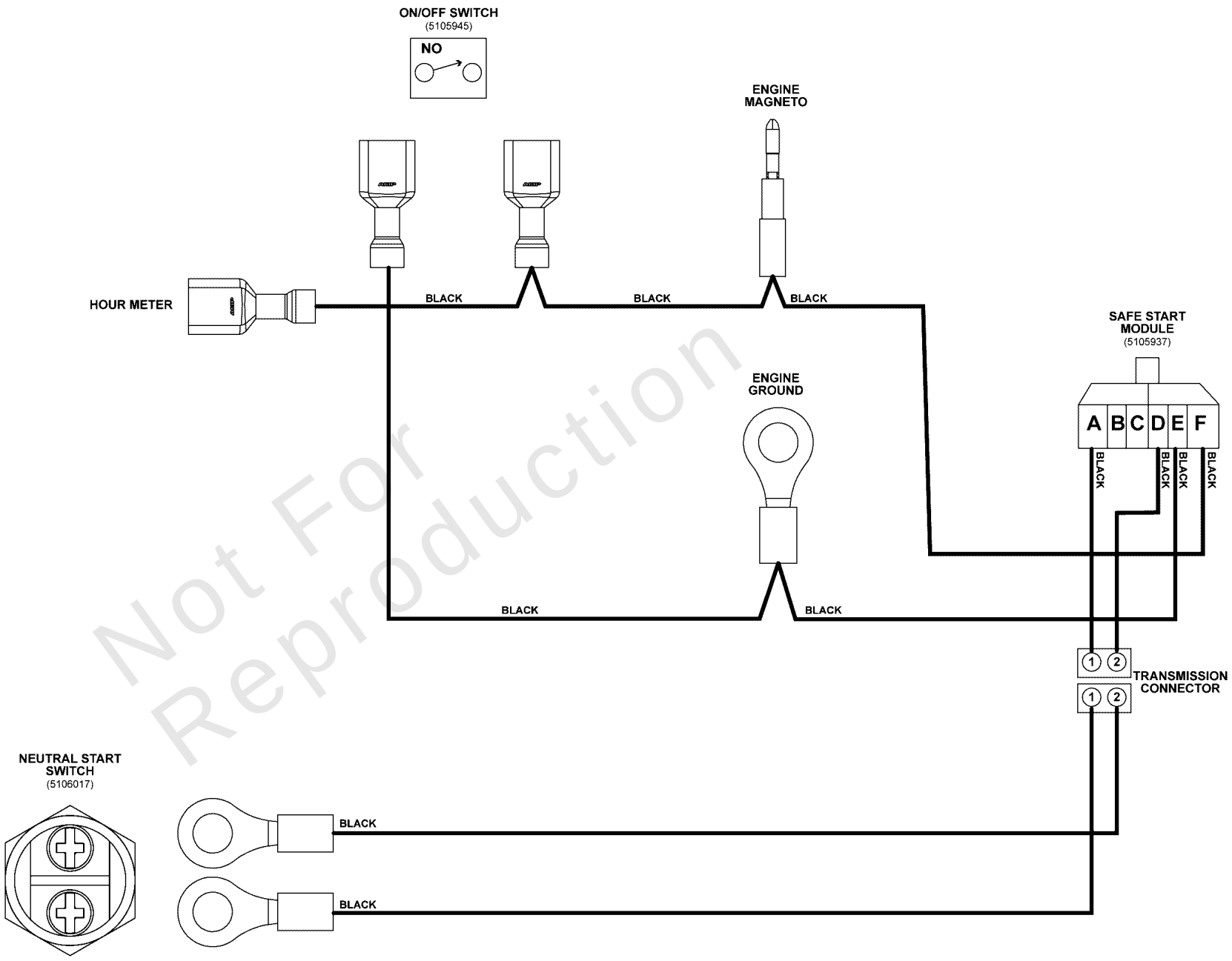

Not For Reproduction

Electrical Schematic

REF NO	PART NO	QTY	DESCRIPTION
5106455	5106455	1	HARNESS, WIRING ROVER/ROVER XC
5105945	5105945	1	SWITCH, ROCKER ON/OFF
5105937	5105937	1	MODULE, SAFE-START
5106017	5106017	1	PEERLESS NEUTRAL START SWITCH

Not For Reproduction

Fuel Tank and Mount Group

Note: Unless noted otherwise, use the standard torque specifications

Mfg. No: 5901753

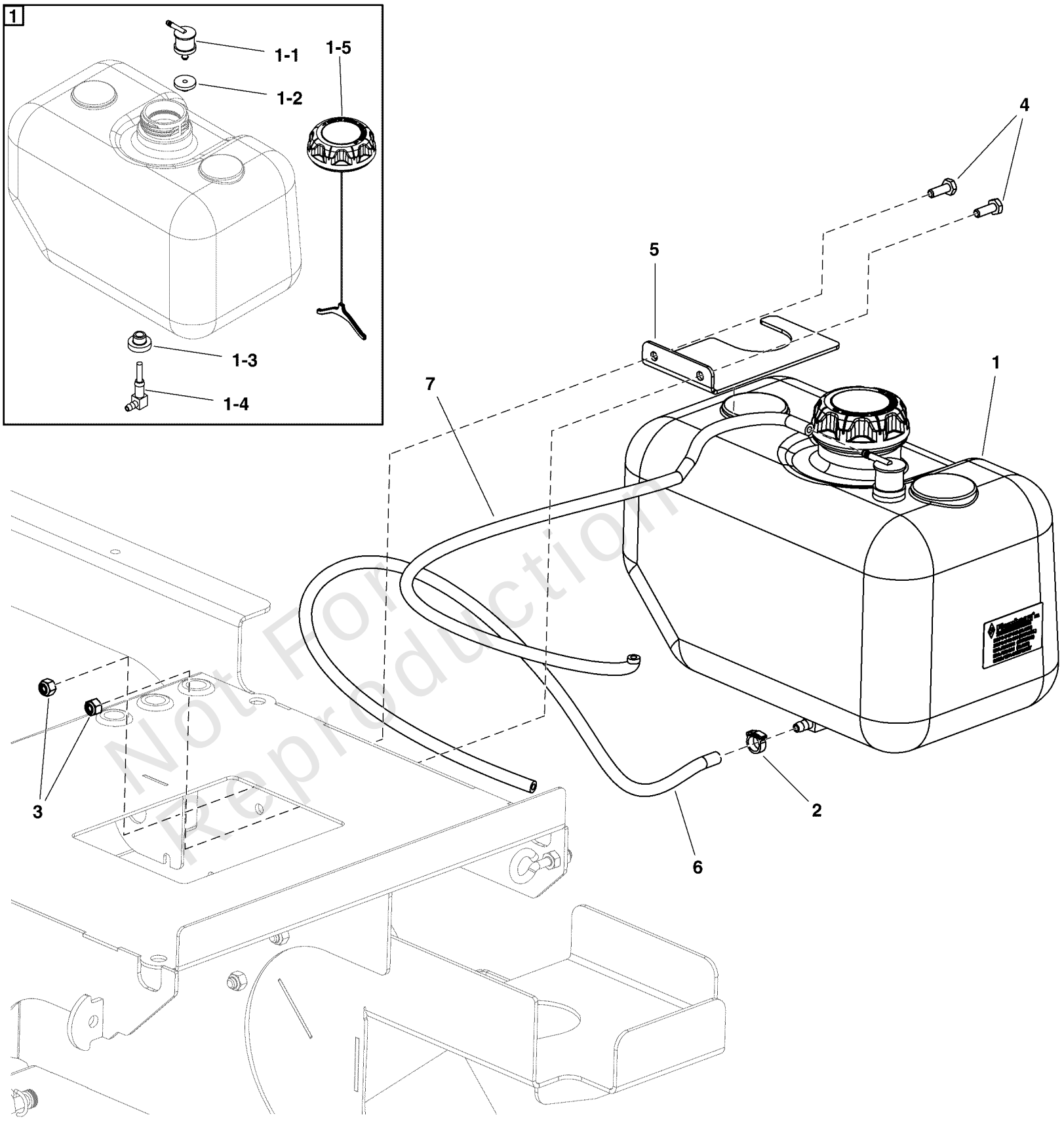

Not For Reproduction

Copyright © Briggs & Stratton. All Rights reserved

Fuel Tank and Mount Group

REF NO	PART NO	QTY	DESCRIPTION
1	5105974	1	TANK, FUEL 2.5 GAL EPA/CARB -(Includes items 1-1 through 1-5)
1-1	5106225	1	VALVE, SLOSH (C0155) -(SV)
1-2	5106176	1	GROMMET, SLOSH VALVE (C0156) -(SV)
1-3	5105885	1	GROMMET, VALVE, FUEL TANK (B0142) -(SV)
1-4	5105993	1	FITTING, FUEL TANK (B0115) -(SV)
1-5	5106070	1	CAP, FUEL, EPA (C0139) -(SV)
2	5106037	1	CLAMP, 3/16 FUEL LINE
3	5106040	2	NUT-HEX-NYLK, .250"-20 SS188
4	5106214	2	SCR-CAP, HEX .250"-20 X .750" SS188
5	5106295	1	BRACKET, HOLD DOWN, FUEL TANK
6	5418426	1	LINE, FUEL 3/16" ID X 15.0"
7	5418428	1	HOSE, FUEL VENT EPA 3/16" ID

Not For Reproduction

Copyright © Briggs & Stratton. All Rights reserved

Handlebar Group

Note: Unless noted otherwise, use the standard torque specifications

Mfg. No: 5901753

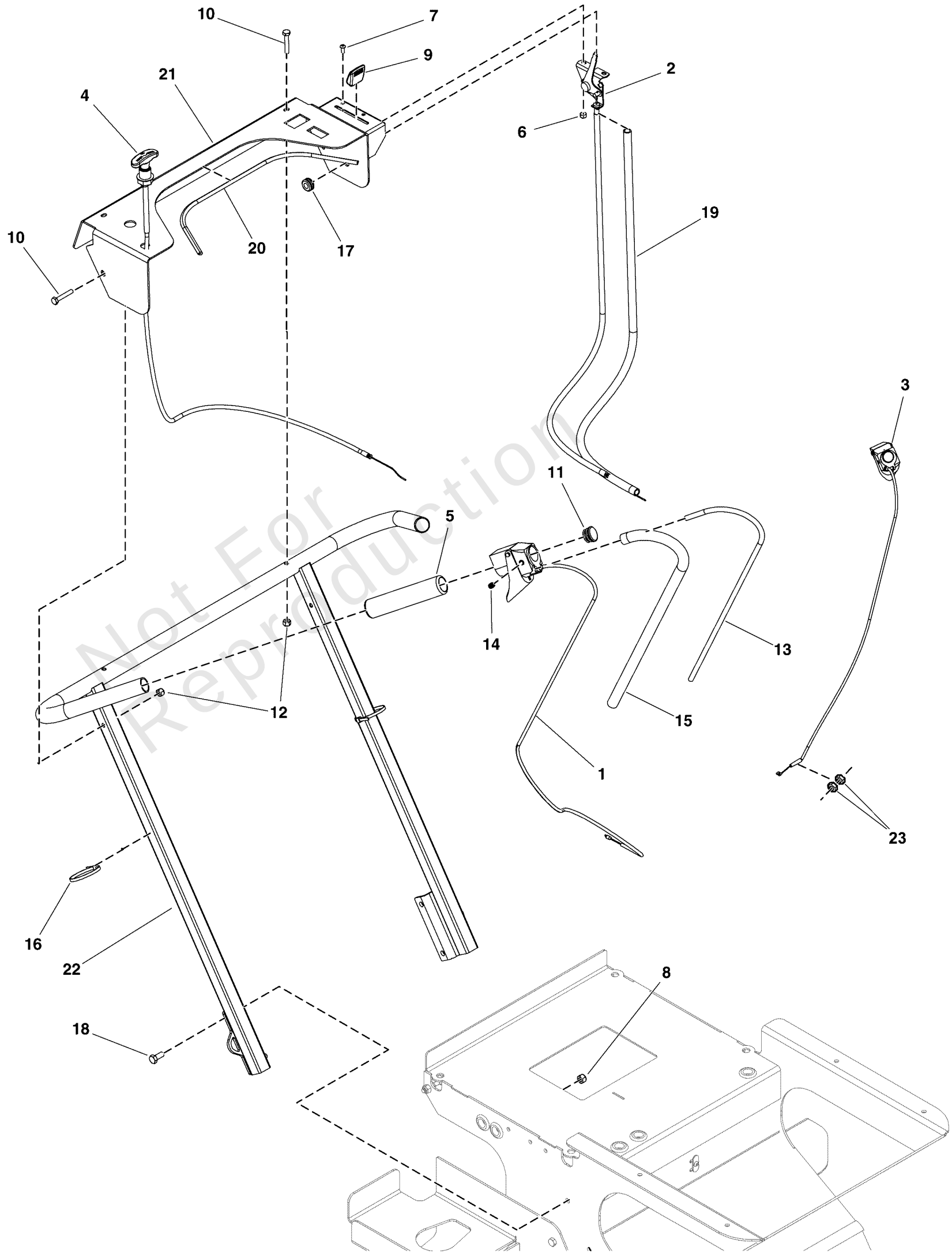

Not For Reproduction

Copyright © Briggs & Stratton. All Rights reserved

Handlebar Group

REF NO	PART NO	QTY	DESCRIPTION
1	5601316	1	KIT, ROVER/PATHFINDER THROTTLE CABLE -(Connects to engine.)
2	5109577	1	CABLE, LEVER ACTION 34" -(Connects to gate assembly.)
3	5108411	1	CABLE, SPRAY
4	5109576	1	CABLE, TURN TO LOCK, 35" -(Connects to gate assembly.)
5	5105928	2	GRIP, .94 ID X .155 THK X 5.75 LONG
6	5105963	2	NUT-HEX-NYLK, #10-24 SS188
7	5105978	2	SCR-CAP, BSH #10-24 X .500" SS188
8	5105992	4	NUT-HEX-NYLK, 0.3125"-18 SS188
9	5106000	1	KNOB, GATE LEVER
10	5106021	4	SCR-CAP, HEX .250"-20 X 1.500" SSF593C
11	5106028	2	PLUG, 1" TUBE, ROUND
12	5106040	4	NUT-HEX-NYLK, .250"-20 SS188
13	5106068	2	ROD,CABLE SUPPORT
14	5106185	2	SCR-SH, SET .3125"-18 X .375" KCPT SS188
15	5106204	2	THROTTLE CABLE SPLIT LOOM, .500" ID
16	5106297	2	CABLE TIE, .188" W X 7.50" LNG
17	5106454	1	GROMMET, 0.375" I.D., FIT 0.500" HOLE
18	5106024	4	SCR-CAP, HEX .3125"-18 X .750" SS188
19	5417981	1	SPLIT LOOM, GATE CABLE, 28"
20	5418134	1	TRIM, CONSOLE, 18.75 LONG
21	5418069	1	WELD, OPERATOR, HANDLEBAR FRAME - XC
22	5106289	1	WELD, FRAME, HANDLE BAR - XC
23	5106016	2	NUT-HEX, JAM .250"-28 SS188

Not For Reproduction

Copyright © Briggs & Stratton. All Rights reserved

Hopper Gate Assembly Group (220 LBS)

Note: Unless noted otherwise, use the standard torque specifications

Mfg. No: 5901753

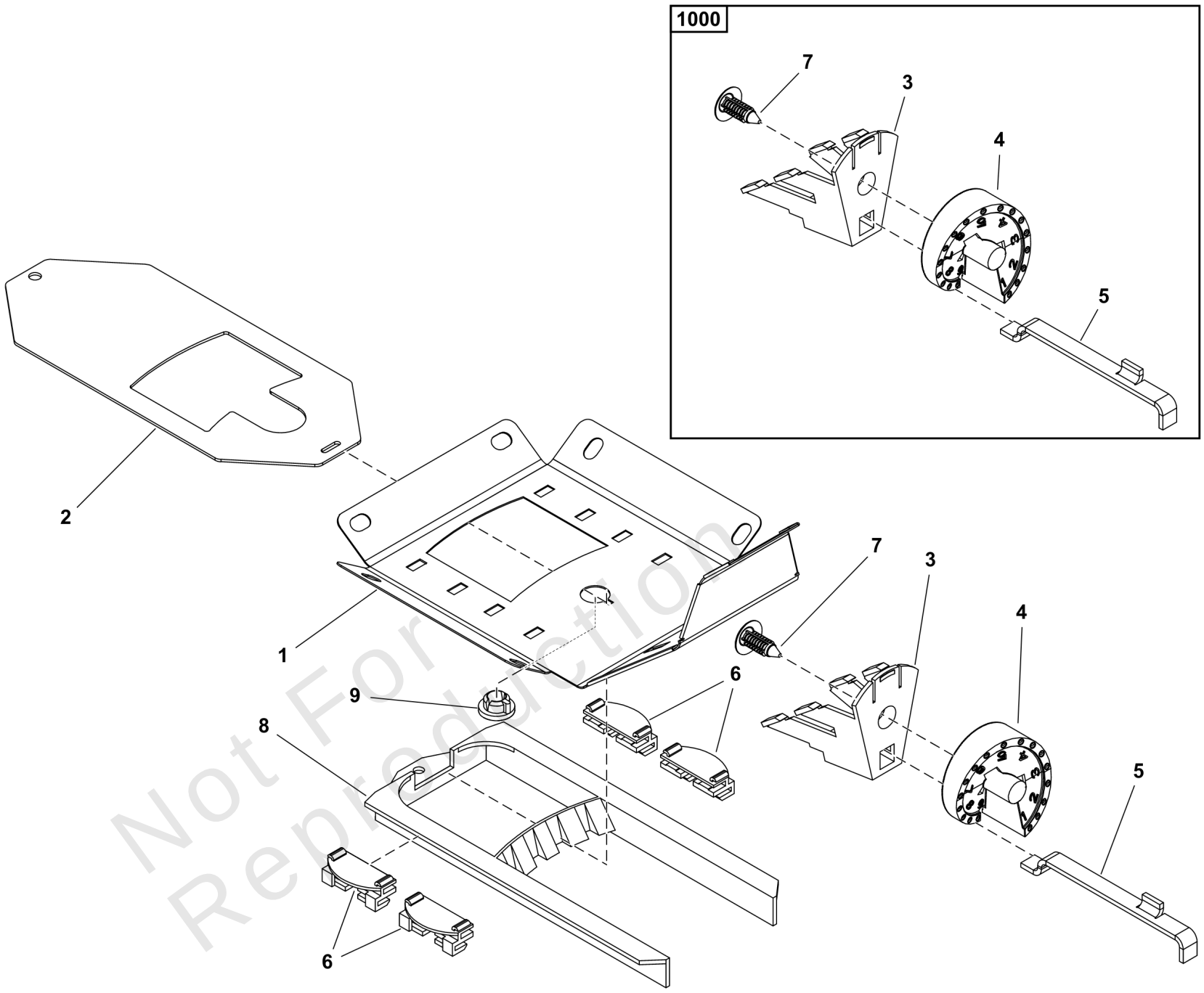

Not For Reproduction

Copyright © Briggs & Stratton. All Rights reserved

Hopper Gate Assembly Group (220 LBS)

REF NO	PART NO	QTY	DESCRIPTION
1	5106197	1	PLATE, HOPPER BOTTOM 220 LBS
2	5106199	1	PLATE, RATE GATE
3	5105888	1	MOUNT, SPREADER DIAL
4	5105913	1	DIAL, CONTROLLER
5	5105942	1	PLATE, STOPPER, GATE OPENING
6	5105933	4	GUIDE, RATE GATE & DIFFUSER
7	5105953	1	PINE TREE CLIP, SPREADER FOR DIA .33"
8	5106014	1	BAFFLE, SPREADER DIFFUSER
9	5105878	1	BUSHING, HOPPER SPREADER
1000	5105923	1	AMMS, DIAL MOUNT (S0130) -(Includes items #3, #4, #5, and #7)

Not For Reproduction

Hopper Group (220 LBS)

Note: Unless noted otherwise, use the standard torque specifications

Mfg. No: 5901753

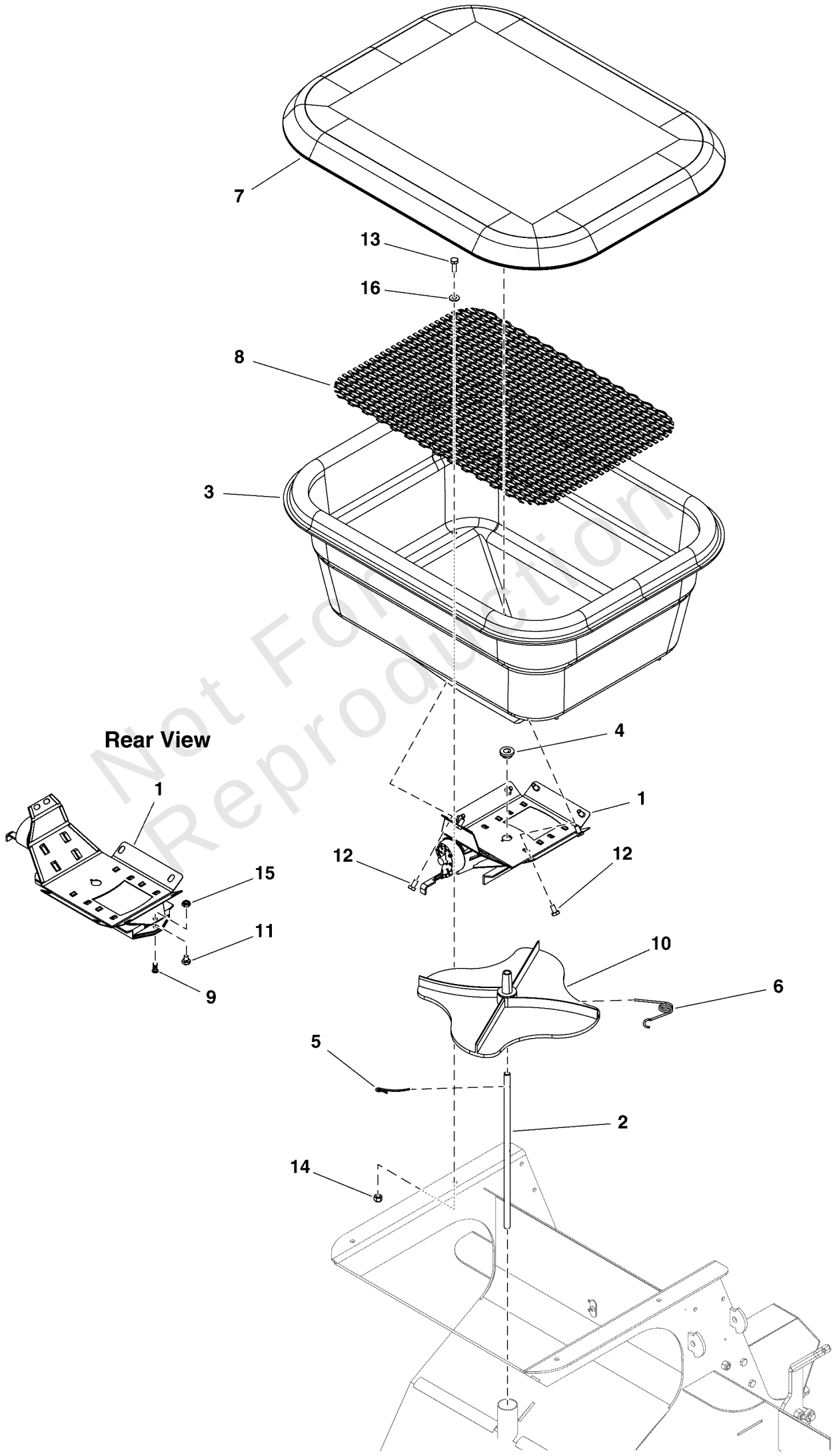

Not For Reproduction

Copyright © Briggs & Stratton. All Rights reserved

Hopper Group (220 LBS)

REF NO	PART NO	QTY	DESCRIPTION
1	5601137	1	ASSEMBLY,GATE,COMPLET
2	5601317	1	KIT, PLATTER SHAFT COUPLING -(Rover Models Only - S/N: 30000003605 and below)(Refer to Note: *)
2	84008078	1	SHAFT, Platter -(Rover Models Only - S/N: 30000003606 and above)
2	5107997	1	SHAFT, PLATTER DRIVE (PATHFINDER/PATHFINDER XC) -(Pathfinder Models Only - S/N: 30000003109 and below)
2	84008078	1	SHAFT, Platter -(Pathfinder Models Only - S/N: 30000003110 and above)
3	5106211	1	HOPPER, 220 LBS
4	5105878	1	BUSHING, HOPPER SPREADER
5	5105875	1	CLIP, SPINNER AGITATOR
6	5105879	1	CLIP, SPREADER SPINNER
7	5105887	1	COVER, HOPPER, MODEL 220
8	84011455	1	SCREEN, Hopper (MODEL 220 LBS PERF)
9	5105921	1	FITTING, SWIVEL ACCUWAY
10	5105880	1	PLATTER, Spinner
11	5105894	1	SCR-CAP, HEX .250"-20 X .375" SS188 SPC
12	5105893	8	SCR-CAP, HEX .250"-20 X .500" SS188
13	5106214	4	SCR-CAP, HEX .250"-20 X .750" SS188
14	5106040	4	NUT-HEX-NYLK, .250"-20 SS188
15	5105915	1	NUT-HEX-NYLK, .250"-20 TH SS188
16	5106067	4	WSHR-STL, FLT .281" X .625" X .050" IS SS188

Not For Reproduction

Footnotes:

Note:

Main Frame Group

Note: Unless noted otherwise, use the standard torque specifications

Mfg. No: 5901753

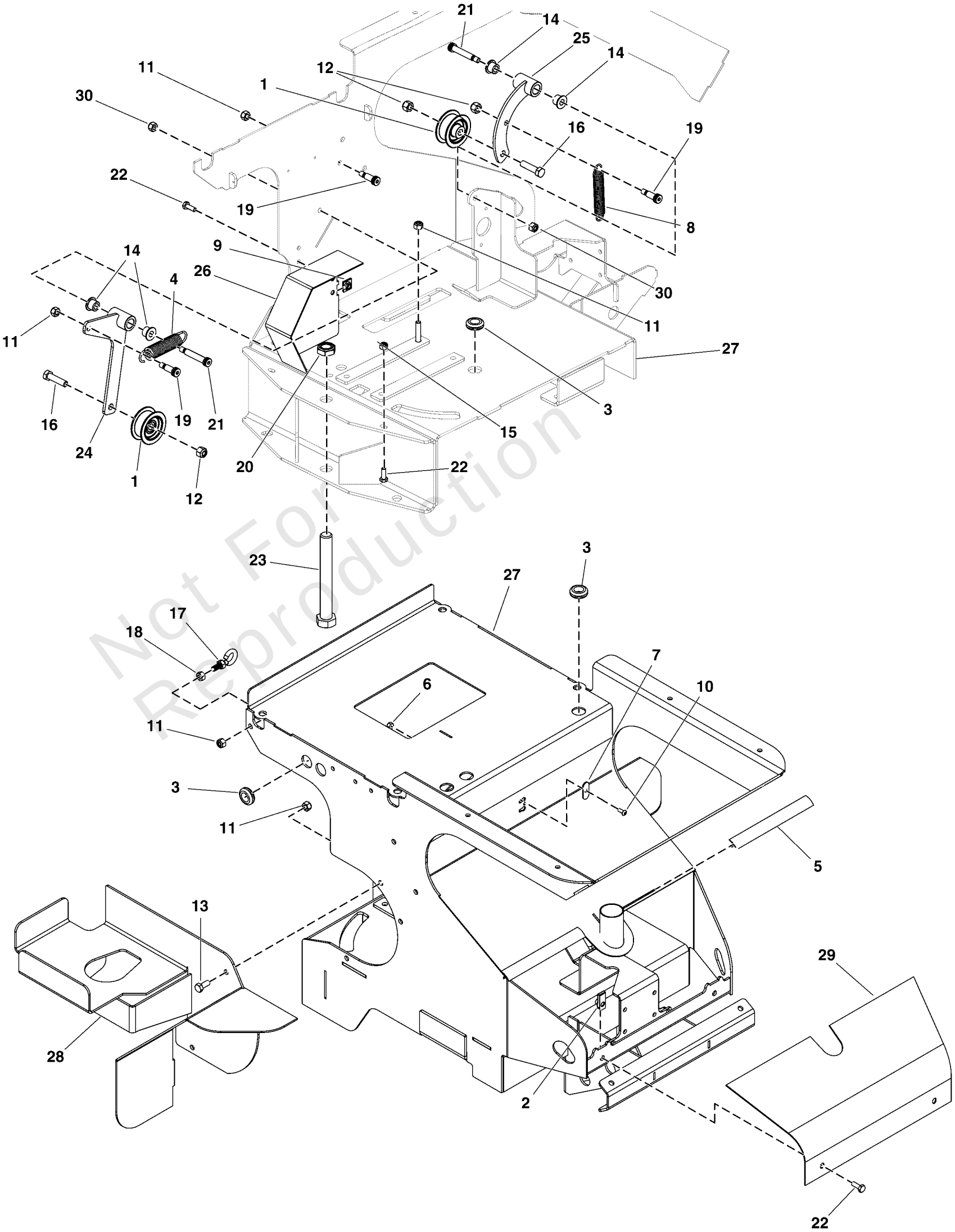

Not For Reproduction

Copyright © Briggs & Stratton. All Rights reserved

Main Frame Group

REF NO	PART NO	QTY	DESCRIPTION
1	5105890	2	PULLEY IDLER 1.75" OD X 3/8" BORE
2	5105898	2	NUT-CLIP .250"-20 X .781" EDGE DISTANCE
3	5105899	7	GROMMET, .875" HOLE X .625" ID X .125 GROOVE
4	5105946	1	SPRING, EXTENSION .840" OD X 4.00" LONG SS
5	5105954	2	SEAL TRIM, FRONT COWL 6.820" LONG
6	5105963	1	NUT-HEX-NYLK, #10-24 SS188
7	5105969	1	PLATE, CABLE HOLDER
8	5105972	1	SPRING, EXTENSION .64" OD X 4.00" LG SS
9	5105973	2	NUT-CLIP, .250"-20 X .375" EDGE DISTANCE
10	5105978	1	SCR-CAP, BSH #10-24 X .500" SS188
11	5105992	10	NUT-HEX-NYLK, 0.3125"-18 SS188
12	5106006	3	NUT-HEX-NYLK, .375"-16 SS188
13	5106024	3	SCR-CAP, HEX .3125"-18 X .750" SS188
14	5108816	4	BSHG-FL, .500" X .625" X .500", .875"x .062" IR
15	5106040	1	NUT-HEX-NYLK, .250"-20 SS188
16	5106069	2	SCR-CAP, HEX .375"-16 X 1.500" SS188
17	5106082	1	BOLT EYE, .3125"-18 X 1.000" SS188
18	5106159	1	NUT-HEX, .3125"-18 SS188
19	5106172	3	BLT-SLDR, SH .38"X0.75,.313-18 X.50 SS
20	5106184	1	NUT-HEX-NYLK, .750"-10 TH GA ZP
21	5107641	2	BLT-SLDR,SH.50"X1.25",.375"-16X.63"SS188
22	5106214	5	SCR-CAP, HEX .250"-20 X .750" SS188
23	5106215	1	SCR-CAP, HEX .750"-10 X 6.000" SS188
24	5106217	1	ASSY, IDLER ARM, LARGE PATH (S0108) -(Serial Number 30000003805 & Below)(Refer to Note: *)
24	5106291	1	WELD, ARM IDLER PATHFINDER -(Serial Number 30000003806 & Above)
25	5106292	1	WELD, ARM, SMALL IDLER
26	5418065	1	WELD, COVER, PULLEY
27	-----	1	WELD, FRAME - XC
28	5418066	1	WELD, FUEL TANK MOUNT - XC
29	5418702	1	PANEL, FRONT COWL - XC
30	5107638	2	NUT-HEX-NYLK, FLG .375"-16 SS188

Not For Reproduction

Footnotes:

Note: *This replacement idler arm includes items #1, 11, 12, 14, 16, 19, 21, 22, 24 & 30.

Copyright © Briggs & Stratton. All Rights reserved

Operator Platform Group

Note: Unless noted otherwise, use the standard torque specifications

Mfg. No: 5901753

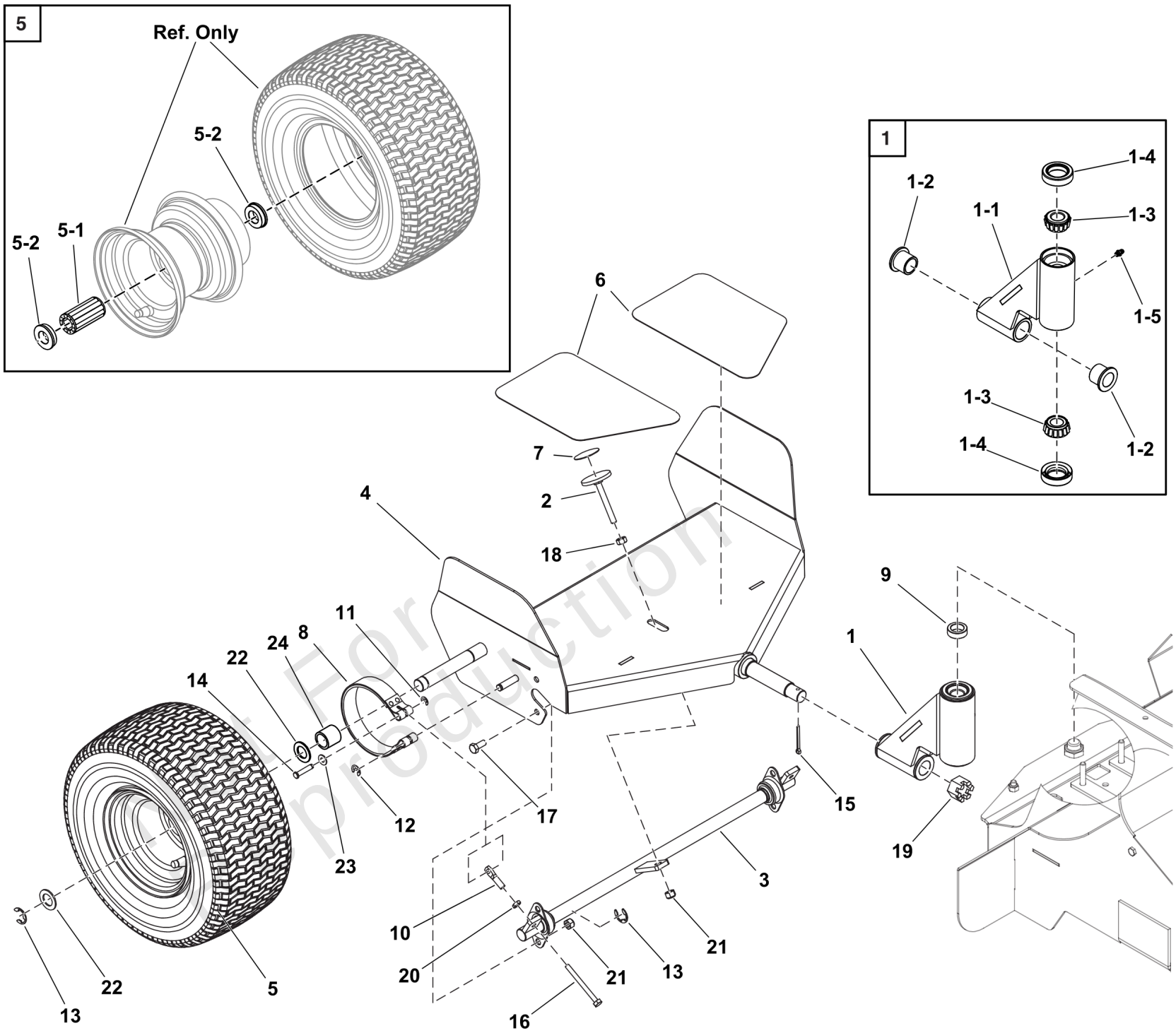

Not For Production

Copyright © Briggs & Stratton. All Rights reserved

Operator Platform Group

REF NO	PART NO	QTY	DESCRIPTION
1	-----	1	ASSM, TIE, PLATFORM (S0104)
1-1	5417983	1	WELD, HINGE SULKY
1-2	5106004	2	BUSHING, FLANGE 7/8 ID X 1 1/8 OD X 1 LG
1-3	5105967	2	CONE, TPR-ROL Ø.750" ID X Ø1.521" OD x .655" TH
1-4	5105975	2	SEAL, 1.125" BORE X 1.784" OD X 0.469 THK
1-5	5106119	1	ZERK, GREASE .250"-28 SS
2	5106254	1	WELD, BRAKE PEDAL
3	5106270	1	BRAKE SHAFT ASSY, ROVER (S0301)
4	5417972	1	WELD, SULKY FRAME
5	5106759	2	ASM, WHEEL & TIRE 13" X 6.50" - 6 TURF
5-1	5105907	2	BEARING, ROLLER (C0147) -(One per tire)
5-2	5105901	4	RETAINER, BEARING (C0148) -(Two per tire)
6	5105929	1	PADS, NON-SLIP PLATFORM
7	5417967	1	PAD, NON-SLIP ROUND BRAKE
8	5105910	2	BRAKE, BAND 4.00 INCH
9	5105986	2	SPCR-SS, 303 .750" X 1.125" X .375
10	5105995	2	NUT-EYE .250" 20 X 1.500 OAL ZP
11	5106605	2	E-RING, 0.250" SHAFT SSPH
12	5106047	2	E-RING, 0.375" SHAFT YZ
13	5105882	4	E-RING, .750" SHAFT YZ
14	5105984	2	PIN, CVS .250" X 1.125" SS188
15	5106163	1	PIN-CTR, .156" X 1.500" SS188
16	5025741	1	SCR-CAP, HEX .250"-20 X 2.50" F593C SS
17	5106024	4	SCR-CAP, HEX .3125"-18 X .750" SS188
18	5106159	1	NUT-HEX, .3125"-18 SS188
19	5106203	1	NUT-HEX, CSTL .750"-16 GR2 ZP
20	5105977	2	NUT-HEX, JAM .250"-20 SS188
21	5105992	5	NUT-HEX-NYLK, 0.3125"-18 SS188
22	5105957	4	WSHR-STL, FLT .750"X1.250" X .075" MAB ZP
23	5106067	2	WSHR-STL, FLT .281" X .625" X .050" IS SS188
24	5601299	1	KIT, SULKY WHEEL SPACER -(Includes item #22.)(Refer to Note: *)

Not For Reproduction

Footnotes:

Note: *This kit contains parts to do both sides of the unit.

Copyright © Briggs & Stratton. All Rights reserved

Parking Brake Group

Note: Unless noted otherwise, use the standard torque specifications

Mfg. No: 5901753

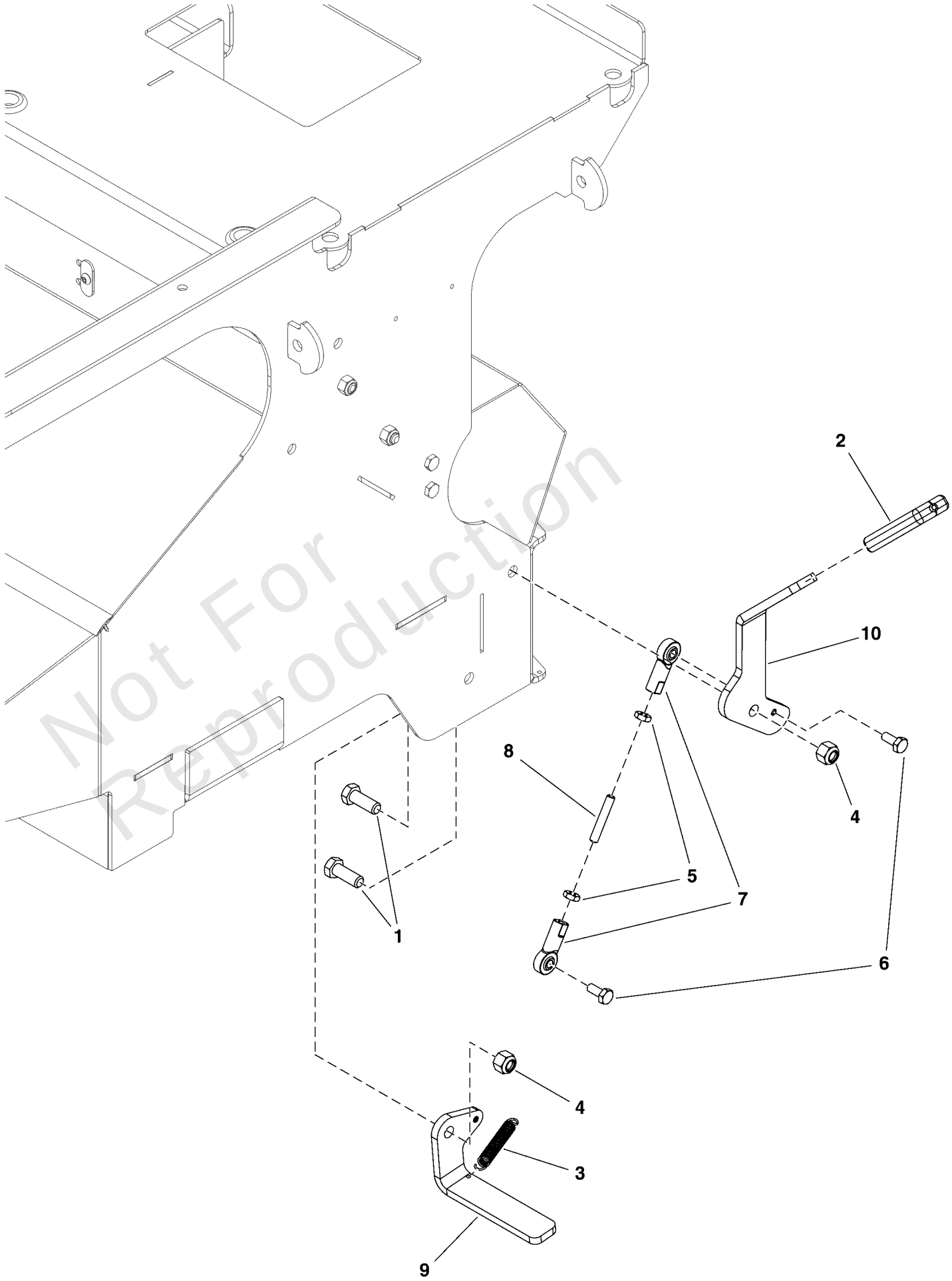

Not For Reproduction

Copyright © Briggs & Stratton. All Rights reserved

Parking Brake Group

REF NO	PART NO	QTY	DESCRIPTION
1	5025649	2	SCR-CAP, HEX .375"-16 X 1.000" SS188
2	5105900	1	GRIP, .188" X 1.00" ID X .150" THK CLSD CELL FOAM
3	84010268	1	SPRING, Extension
4	5106006	2	NUT-HEX-NYLK, .375"-16 SS188
5	5106016	2	NUT-HEX, JAM .250"-28 SS188
6	5106029	2	SCR-CAP, HEX .250"-20 X .625" SS188
7	5106173	2	ROD END, FEMALE 1/4-28 RH SS PTFE RACE
8	5106174	1	ROD, THREADED .250"-28 X 1.500" SS188
9	5106280	1	BRACKET, BRAKE BAR
10	5417966	1	HANDLE, PARK BRAKE

Not For Reproduction

Copyright © Briggs & Stratton. All Rights reserved

Note: Unless noted otherwise, use the standard torque specifications

Mfg. No: 5901753

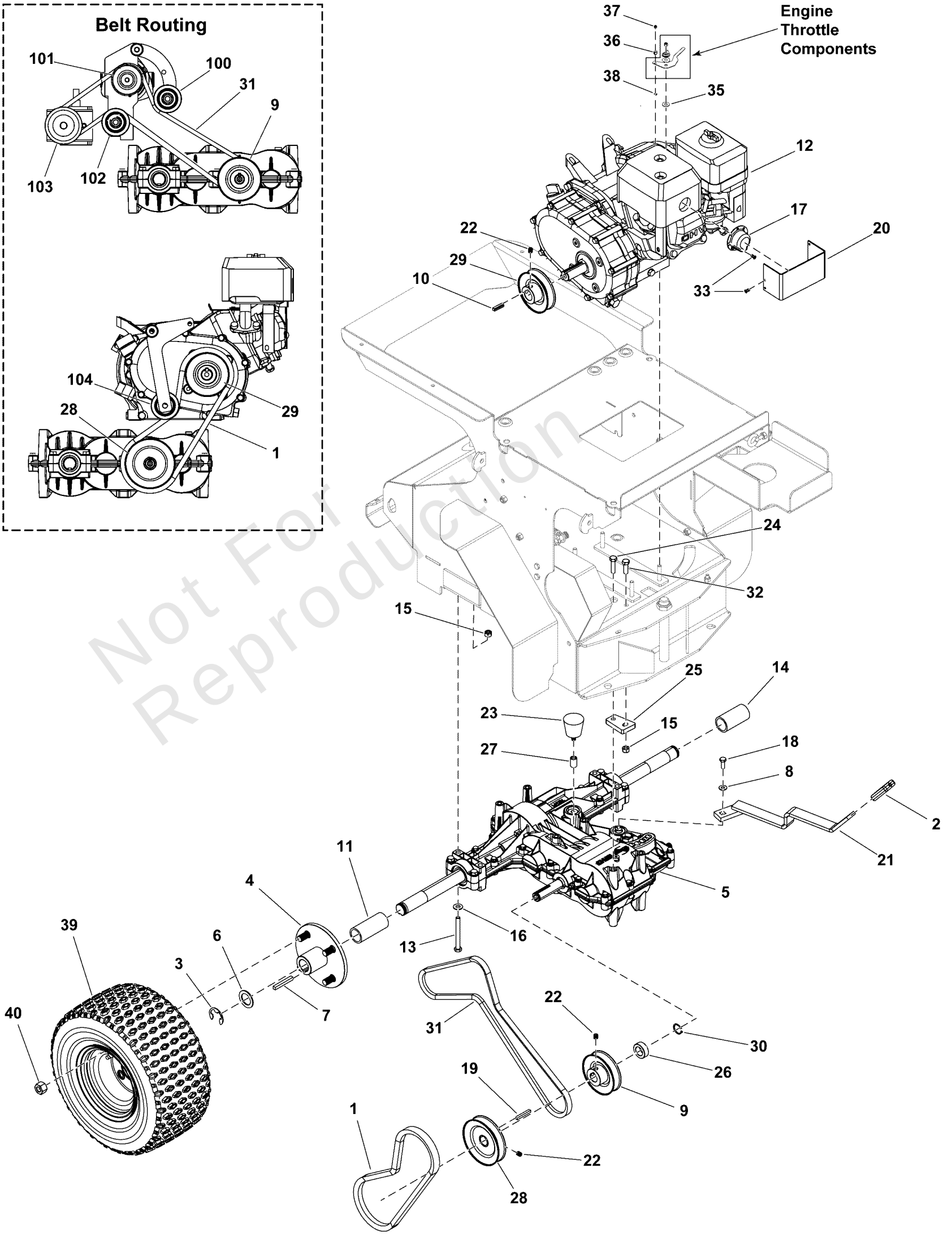

Not For Reproduction

Copyright © Briggs & Stratton. All Rights reserved

Power Transmission Group

REF NO	PART NO	QTY	DESCRIPTION
1	5105884	1	BELT, V, BX26 29.00 OC
2	5105900	1	GRIP, .188" X 1.00" ID X .150" THK CLSD CELL FOAM
3	5105909	2	E-RING, 1.000" SHAFT YZ
4	5105920	2	HUB, 1.00" BORE 4-BOLT X 4.00" BC
5	5105934	1	TRANSMISSION, PEERLESS 855-007D
6	5105936	2	WSHR-STL, FLT 1.000"X1.500"X.075" MAB ZP
7	5105938	2	KEY, .250" SQ. X 2" SS188
8	84008081	1	WSHR-SS, BLV .281"X.875"x.066
9	5105968	1	PULLEY, 3.50" O.D. x 0.750" I.D. V, A/B
10	5105970	1	KEY, .188"-.250" STEPPED X 1.00" LONG SS 304 -(S/N: 30000003969 & Below)
10	84008432	1	KEY, Drive Pulley -(S/N: 30000003970 & Above)
11	5105976	1	SPCR-PVC 1.049" X 1.315" X 3.000
12	5105979	1	ENGINE, PATHFINDER/XC
13	5105980	4	SCR-CAP, HEX .3125"-18 X 3.000" SS188
14	5105991	1	SPCR-PVC 1.049" X 1.315" X 2.850"
15	5105992	5	NUT-HEX-NYLK, 0.3125"-18 SS188
16	5106009	4	WSHR-STL, FLT .343" X .750" X .050" SPC SS188
17	5106020	1	DEFLECTOR, EXHAUST HONDA GX160/GX200
18	5106032	1	SCR-CAP, HEX .250"-28 X 0.750" SS188
19	5106038	1	KEY, .188" SQ. X 1.50" SS303
20	5106077	1	PLATE, VALVE MOUNTING
21	5106152	1	WELD, GEAR SHIFT LEVER
22	5106185	6	SCR-SH, SET .3125"-18 X .375" KCPT SS188
23	5106216	1	BUMPER, 1.188OD X 1.50LG W/.3125-18 STUD
24	5106233	1	SCR-CAP, HEX .3125"-18 X 1.250" SS188
25	5106258	1	PLATE, SPACER, TRANSMISSION
26	5106259	1	SPCR-UHMW .765" X 1.250" X .450"
27	5106281	1	SPACER, 0.50" OD X 5/16"-18 THRD X .80" LNG
28	5106498	1	PULLEY, 4.00" O.D. x 0.750" I.D. V, A/B
29	5106499	1	PULLEY, 3.50" O.D. x 0.875" I.D. V, A/B -(S/N: 30000003969 & Below)
29	84008431	1	PULLEY, Crankshaft -(S/N: 30000003970 & Above)
30	5106526	1	RING, RETAINING EXTERNAL 3/4" ZP
31	5105922	1	BELT, A-SEC, A43 (C0152)
32	5106576	1	SCR-CAP, HEX .3125"-18 X 1.000" SS188
33	5417956	6	RIVET, BLIND .125" X 250" SS188
34	5106007	1	SPRING, EXTENSION .25" OD X 1.00 LONG SS -(Not illustrated.)
35	5109806	1	WASHER, Nylon, Flat, .385" X .880" X .125"
36	814106	1	RETAINER, WIRE HEX 10MM
37	80081803	1	SCREW, HEX WASHER HEAD M4 X 0.7 - 6H
38	813252	1	RING, RETAINING
39	5418044	2	ASM, WHEEL&TIRE 18" X 9.50" W/ANTI-FREEZE
40	5105964	8	NUT-LUG, .500"-20 ZP
100	-----	1	PUMP IDLER PULLEY -(Refer to Main Frame Group)
101	-----	1	PUMP PULLEY -(Refer to Pump and Gearbox Group)
102	-----	1	STATIONARY IDLER PULLEY -(Refer to Pump and Gearbox Group)

Not For Reproduction

Copyright © Briggs & Stratton. All Rights reserved

Note: Unless noted otherwise, use the standard torque specifications

Mfg. No: 5901753

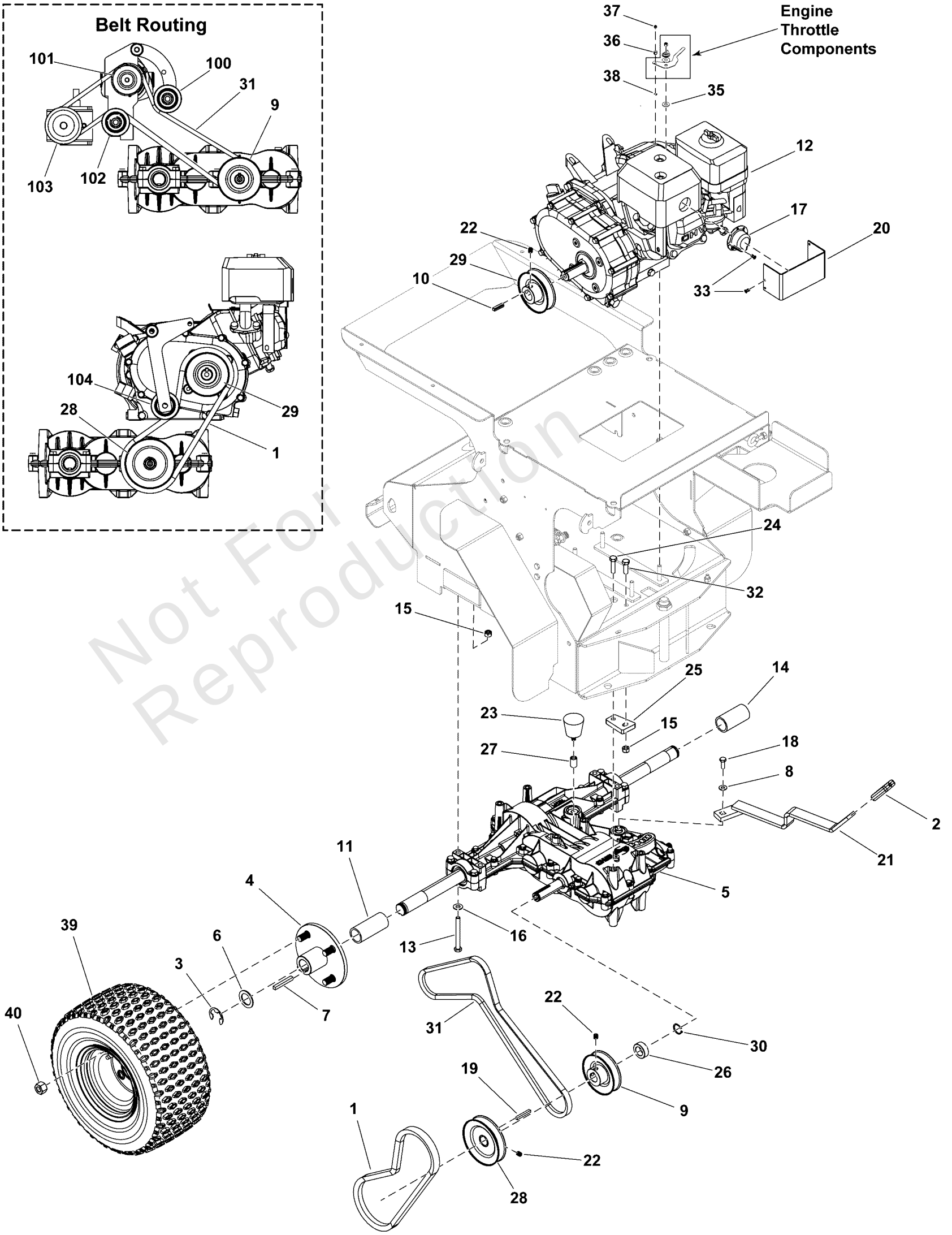

Not For Reproduction

Copyright © Briggs & Stratton. All Rights reserved

Power Transmission Group

REF NO	PART NO	QTY	DESCRIPTION
103	-----	1	GEARBOX PULLEY -(Refer to Pump and Gearbox Group)
104	-----	1	TRANSAXLE IDLER PULLEY -(Refer to Main Frame Group)

Not For Reproduction

Copyright © Briggs & Stratton. All Rights reserved

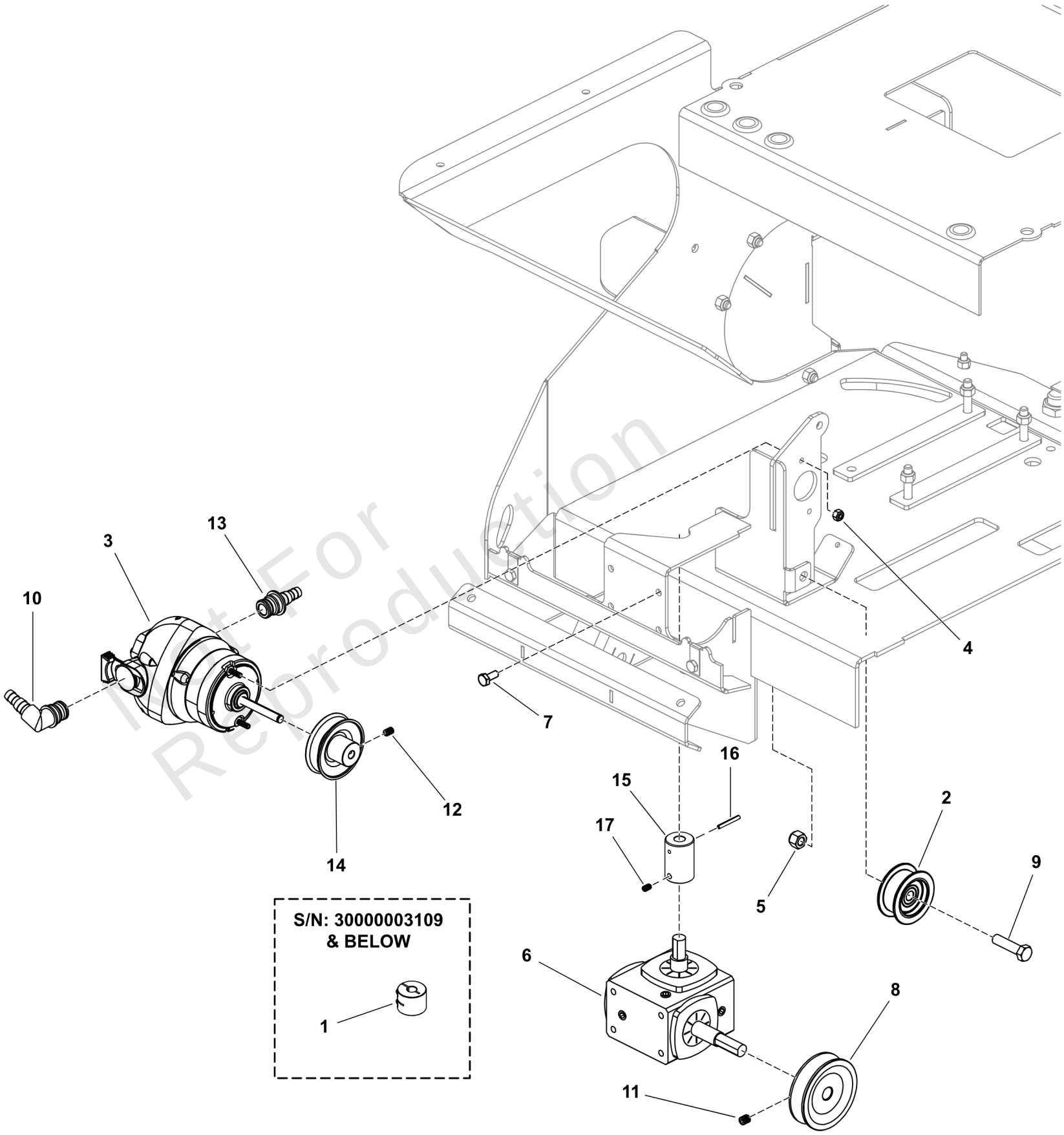

Not For Reproduction

Pump and Gearbox Group

REF NO	PART NO	QTY	DESCRIPTION
1	5601317	1	KIT, PLATTER SHAFT COUPLING -(S/N: 30000003109 and below)(Refer to Note: **)
2	5105890	1	PULLEY IDLER 1.75" OD X 3/8" BORE
3	5105919	1	PUMP, PULLEY DRIVEN, 1.86 GPM
4	5105963	2	NUT-HEX-NYLK, #10-24 SS188
5	5106006	1	NUT-HEX-NYLK, .375"-16 SS188
6	5108269	1	GEAR REDUCER W/ Ø.375" SHAFT -(Refer to Note: *)
6	5105931	1	GEAR REDUCER W/ Ø.500" SHAFT -(Refer to Note: *)
6	5106013	1	GEAR REDUCER W/ 2.50" LONG Ø.500" SHAFT -(Refer to Note: *)
7	5106029	4	SCR-CAP, HEX .250"-20 X .625" SS188
8	5106041	1	PULLEY, 2.95" O.D. x 0.500" I.D. V, A/B
9	5106069	1	SCR-CAP, HEX .375"-16 X 1.500" SS188
10	5106073	1	FITTING, QUICK RELEASE 3/8 BARB 90 ELBOW
11	5106185	1	SCR-SH, SET .3125"-18 X .375" KCPT SS188
12	5106335	1	SCR-SH, SET .250"-20 X .375" KCPT SS188
13	5106517	1	FITTING, QUICK RELEASE 3/8 BARB STRAIGHT
14	5106741	1	PULLEY, 2.50" OD X .315 ID V, A/B -(Refer to Note: **)
15	5109472	1	COUPLING, SS, PLATTER SHAFT -(S/N: 30000003110 and above)
16	5109473	1	PIN, COILED SPG, SS, .125" DIA X 1.00"LG -(S/N: 30000003110 and above)
17	5109474	1	SCREW, SET, .190" DIA X .3125" LG. 18-8 -(S/N: 30000003110 and above)

Not For Reproduction

Footnotes:

Note: **Some older models may have featured a pulley and a bushing, the replacement pulley does not require the bushing.
Note: *Measure the gearbox shafts prior to ordering.
Note:

Copyright © Briggs & Stratton. All Rights reserved

Note: Unless noted otherwise, use the standard torque specifications

Mfg. No: 5901753

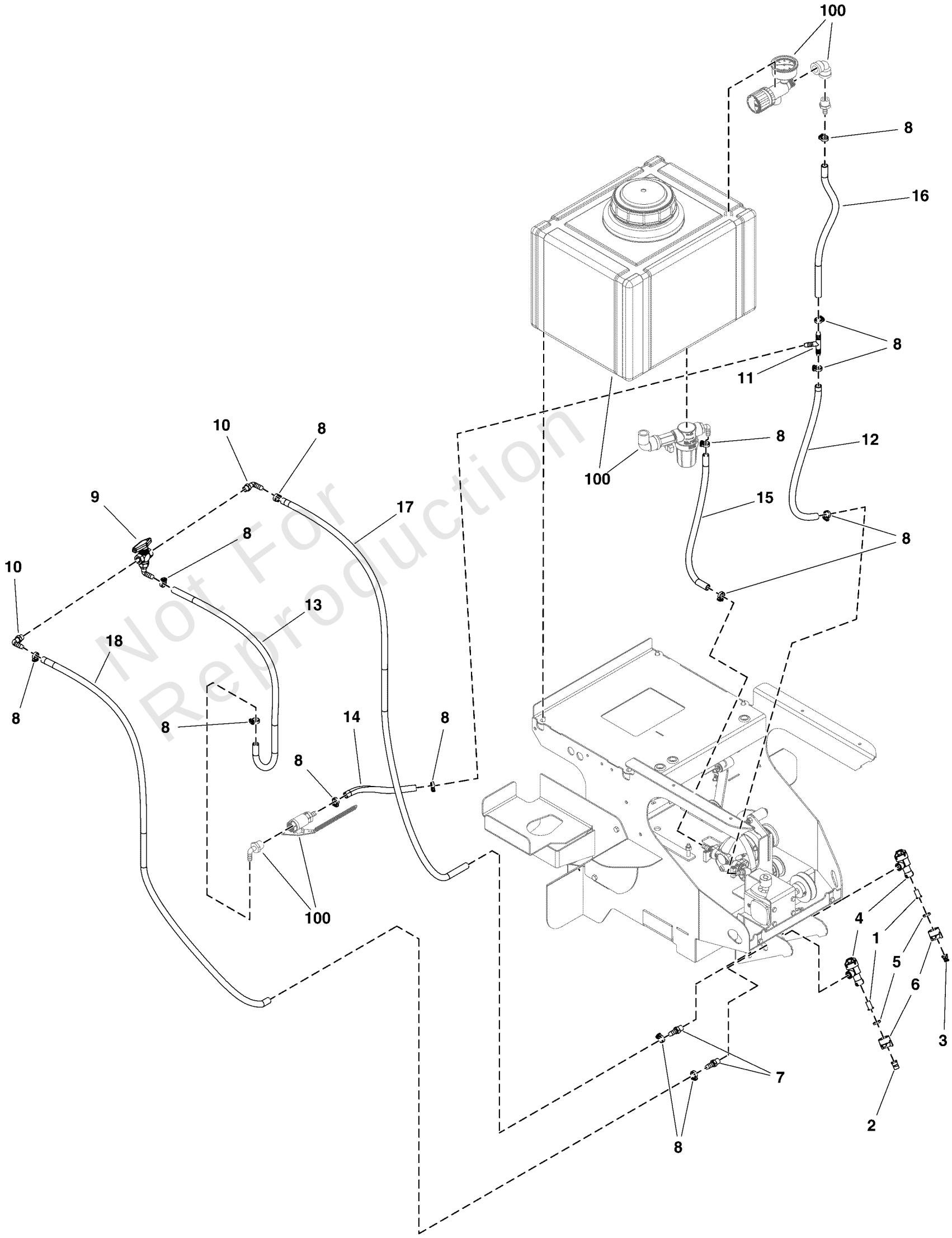

Not For Reproduction

Copyright © Briggs & Stratton. All Rights reserved

Spray System Group

REF NO	PART NO	QTY	DESCRIPTION
1	5105904	2	STRAINER, 50 MESH, POLYPROPYLENE TIP
2	5105905	1	NOZZLE, TURBO FLOODJET BROADCAST, TK-VS5
3	5105914	1	NOZZLE, TURBO TRIM, TT11004VP
4	5105918	2	NOZZLE BODY ADAPTER
5	5105924	2	NOZZLE CAP SEAT GASKET, STANDARD
6	5105932	2	QUICK ATTACH CAP, STANDARD
7	5105948	2	FITTING, 1/4 MALE, 3/8 BARB
8	5106683	14	CLAMP, MINIATURE WORM GEAR MAH6
9	5106153	1	VALVE, 1/4FNPT, 3-WAY
10	5106158	3	FITTING, 1/4NPT - 3/8 BARB, 90 ELBOW
11	5106183	1	FITTING, TEE 3/8 BARB
12	5418076	1	HOSE, .375 ID, 23" LONG
13	5418095	1	HOSE, SPRAY CONTROL, .375 ID, 32" LONG
14	5418151	1	HOSE, .375 ID, 8" LONG
15	5418077	1	HOSE, .375 ID, 18" LONG
16	5418077	1	HOSE, .375 ID, 18" LONG
17	5418078	1	HOSE, SPRAY, .375 ID, 57" LONG
18	5418079	1	HOSE, SPRAY, .375 ID, 50" LONG
19	5418159	1	HOSE, .375 ID, 15" LONG
100	-----	1	Refer to: Tank Spray Group

Not For Reproduction

Copyright © Briggs & Stratton. All Rights reserved

Spray Tank Group

Note: Unless noted otherwise, use the standard torque specifications

Mfg. No: 5901753

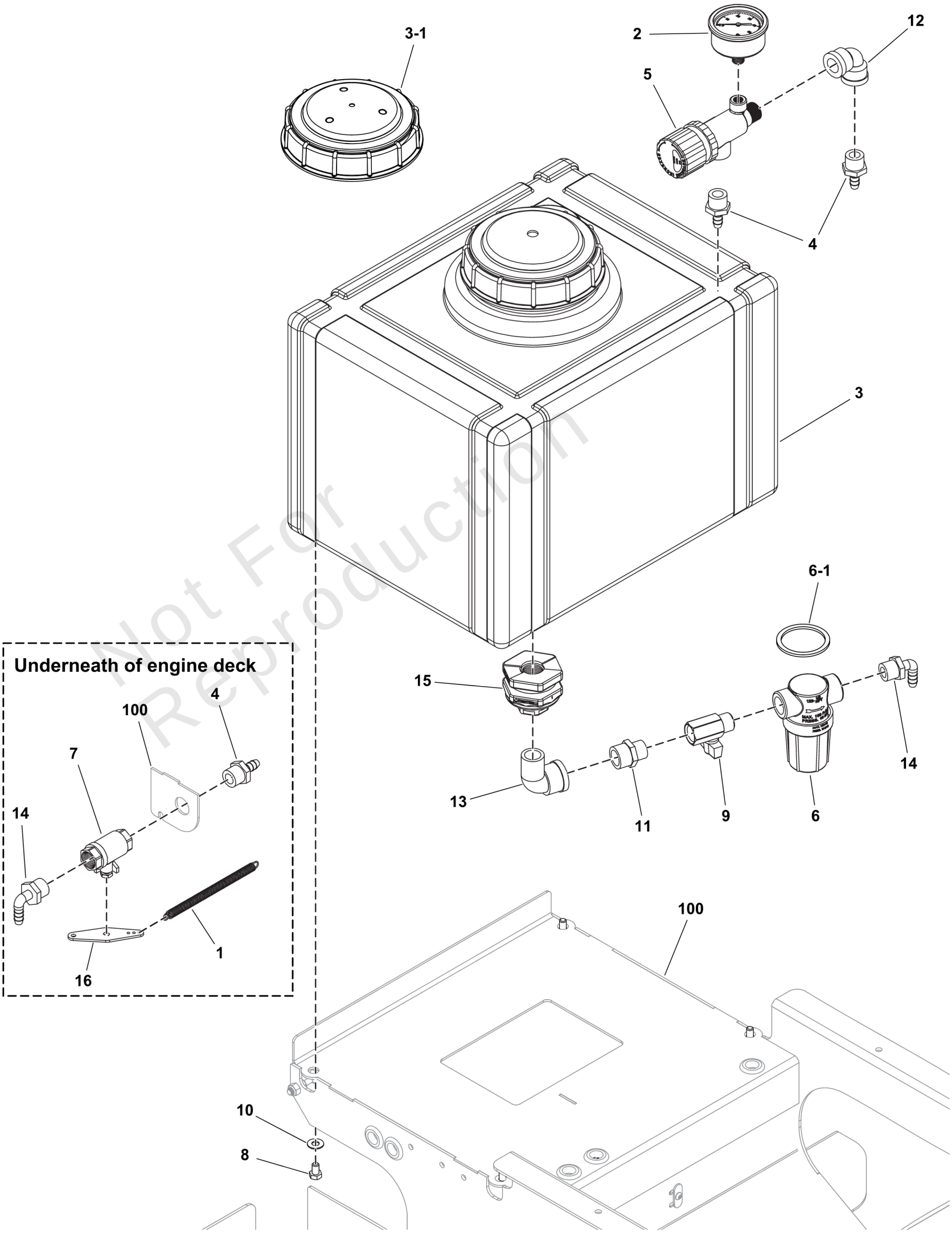

Not For Reproduction

Copyright © Briggs & Stratton. All Rights reserved

Spray Tank Group

REF NO	PART NO	QTY	DESCRIPTION
1	5105889	1	SPRING, EXTENSION .64" OD X 4.00" LG SS
2	5105941	1	PRESSURE GAUGE, 60 PSI, BACK MOUNT
3	5420628	1	PATHFINDER XC LIQUID TANK - SERVICE ONLY -(Includes items #3-1 and #3-15).
3-1	5105985	1	LID, TANK, SPRAY (G0134)
4	5105956	3	FITTING, 1/2 MALE, 3/8 BARB
5	5105959	1	PRESSURE RELIEF VALVE, 150PSI
6	84008892	1	STRAINER -(Includes item #6-1.)
6-1	84009456	1	GASKET
7	5105962	1	BALL VALVE, 600 PSI
8	5105996	4	SCR-CAP, HEX .3125"-18 X .500" SS188
9	5106003	1	VALVE, BALL, 1/2 MPT - 1/2 FPT
10	5106009	4	WSHR-STL, FLT .343" X .750" X .050" SPC SS188
11	5106059	1	REDUCER BUSHING, 3/4NPT - 1/2NPT, NYLON
12	5106080	1	FITTING, 1/2FNPT - 1/2FNPT, 90 ELBOW
13	5106167	1	FITTING, 3/4NPT - 3/4FNPT, 90 ELBOW
14	5106201	2	FITTING, 1/2MNPT, 3/8 BARB, 90 ELBOW
15	5106288	1	FITTING, TANK BULKHEAD 3/4" POLY
16	5418040	1	PLATE, VALVE ACTUATOR ARM
100	-----	1	FRAME -(Refer to Main Frame Group)

Not For Reproduction

Spreader Shield Group

Note: Unless noted otherwise, use the standard torque specifications

Mfg. No: 5901753

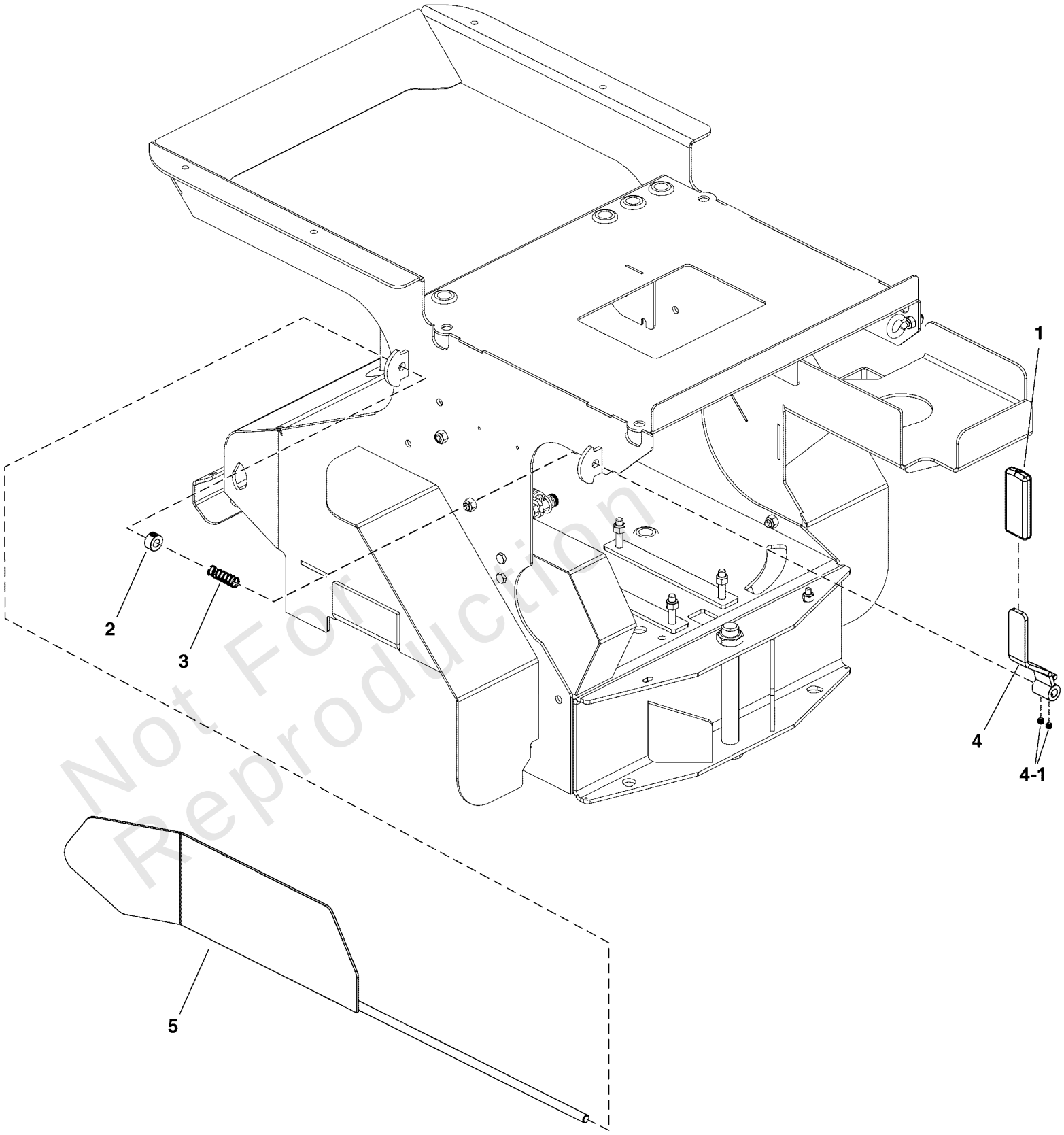

Not For Reproduction

Copyright © Briggs & Stratton. All Rights reserved

Spreader Shield Group

REF NO	PART NO	QTY	DESCRIPTION
1	5105900	1	GRIP, .188" X 1.00" ID X .150" THK CLSD CELL FOAM
2	5106023	1	COLLAR, SHAFT .375ID X .750OD X .375WD
3	5106027	1	SPRING, COMPRESSION .480" OD X 1.500 LONG SS
4	5418739	1	ASM, HANDLE DIVERTER W/GRIP PATHFINDER -(Includes items #1 and 4-1)
4-1	-----	2	SET SCREW, 1/4"-20 X 3/16" Hex Socket
5	5418074	1	WELD, DIVERTER

Not For Reproduction

Copyright © Briggs & Stratton. All Rights reserved

Hardware Identification & Torque Specifications

Torque Specification Chart

FOR STANDARD METRIC MACHINE HARDWARE (Tolerance ± 20%)

Property Class	5.6 Class 5.6		8.8 Class 8.8		10.9 Class 10.9		12.9 Class 12.9	
Size Of Hardware	*in/lbs* **ft/lbs**	Nm.	*in/lbs* **ft/lbs**	Nm.	*in/lbs* **ft/lbs**	Nm.	*in/lbs* **ft/lbs**	Nm.
M3	*5.88*	*.56*	*13.44*	*1.28*	*19.2*	*1.80*	*22.92*	2.15
M4	*13.44*	*1.28*	*30.72*	*2.90*	*43.44*	*4.10*	*52.56*	4.95
M5	*26.4*	*2.50*	*60.96*	*5.75*	**5.97**	*8.10*	**7.15**	9.7
M6	*44.64*	*4.3*	**7.3**	*9.9*	**10.3**	*14*	**12.1**	16.5
M7	**5.2**	*7.1*	**12.1**	*16.5*	**16.9**	*23*	**19.9**	27
M8	**7.7**	*10.5*	**17.7**	*24*	**25**	*34*	**29**	40
M10	**15**	*21*	**35**	*48*	**50**	*67*	**59**	81
M12	**26**	*36*	**61**	*83*	**86.2**	*117*	**103**	140
M14	**42**	*58*	**101**	*132*	**136**	*185*	**162**	220
M16	**64**	*88*	**147**	*200*	**210**	*285*	**250**	340
M18	**89**	*121*	**202**	*275*	**287**	*390*	**346**	470
M20	**126**	*171*	**290**	*390*	**405**	*550*	**486**	660
M22	**169**	*230*	**390**	*530*	**559**	*745*	**656**	890
M24	**217**	*295*	**497**	*375*	**708**	*960*	**840**	1140
M27	**320**	*435*	**733**	*995*	**1032**	*1400*	**1239**	1680
M30	**435**	*590*	**995**	*1350*	**1401**	*1900*	**1681**	2280
M33	**590**	*800*	**1349**	*1830*	**1902**	*2580*	**2278**	3090
M36	**759**	*1030*	**1740**	*2360*	**2441**	*3310*	**2935**	3980
M39	**988**	*1340*	**2249**	*3050*	**3163**	*4290*	**3798**	5150

The guides and ruler furnished below are designed to help you select the appropriate hardware.

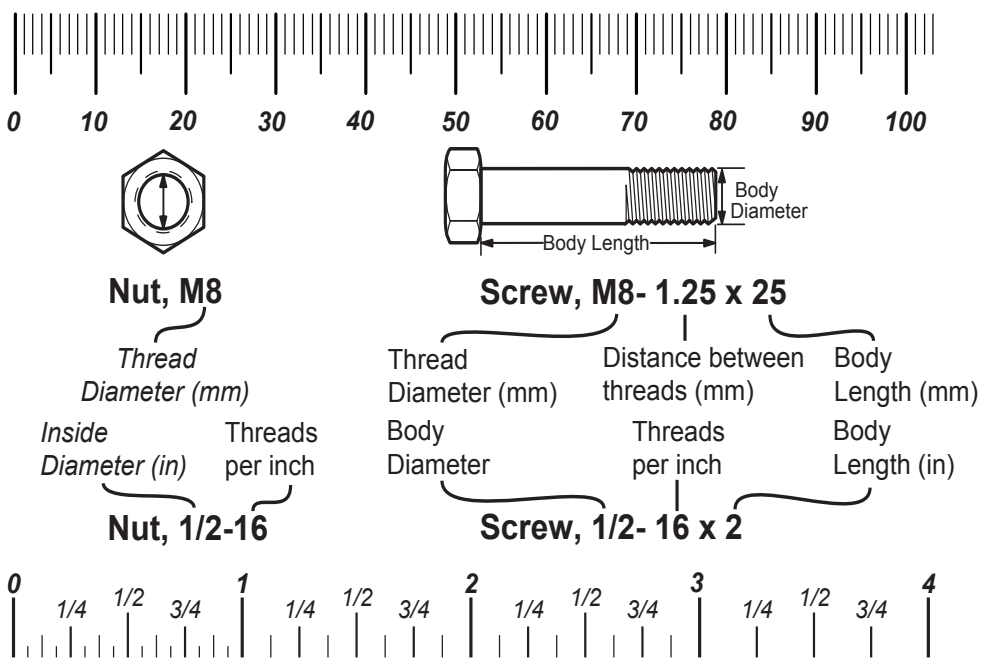

Standard Hardware Sizing

When a washer or nut is identified as **1/2"** (M8), this is the *Nominal size*, meaning the *inside diameter* is 1/2 inch (8mm metric thread diameter); if a second number is present it represents the *threads per inch* (distance between threads).

When bolt or capscrew is identified as **1/2 - 16 x 2"** (M8 - 1.25 x 50), this means the *Nominal size*, or body diameter is 1/2 inch (8mm metric thread diameter), the second number,16, represents the *threads per inch, (distance between threads).* The final number is the body length of the bolt or screw, 2 inches (50mm).

Torque Specification Chart

FOR STANDARD MACHINE HARDWARE (Tolerance ± 20%)

Hardware Grade	No Marks SAE Grade 2		SAE Grade 5		SAE Grade 8	
Size Of Hardware	*in/lbs* **ft/lbs**	Nm.	*in/lbs* **ft/lbs**	Nm.	*in/lbs* **ft/lbs**	Nm.
8-32	*19*	2.1	*30*	3.4	*41*	4.6
8-36	*20*	2.3	*31*	3.5	*43*	4.9
10-24	*27*	3.1	*43*	4.9	*60*	6.8
10-32	*31*	3.5	*49*	5.5	*68*	7.7
1/4-20	*66*	7.6	**8**	10.9	**12**	16.3
1/4-28	*76*	8.6	**10**	13.6	**14**	19.0
5/16-18	**11**	15.0	**17**	23.1	**25**	34.0
5/16-24	**12**	16.3	**19**	25.8	**29**	34.0
3/8-16	**20**	27.2	**30**	40.8	**45**	61.2
3/8-24	**23**	31.3	**35**	47.6	**50**	68.0
7/16-14	**30**	40.8	**50**	68.0	**70**	95.2
7/16-20	**35**	47.6	**55**	74.8	**80**	108.8
1/2-13	**50**	68.0	**75**	102.0	**110**	149.6
1/2-20	**55**	74.8	**90**	122.4	**120**	163.2
9/16-12	**65**	88.4	**110**	149.6	**150**	204.0
9/16-18	**75**	102.0	**120**	163.2	**170**	231.2
5/8-11	**90**	122.4	**150**	204.0	**220**	299.2
5/8-18	**100**	136	**180**	244.8	**240**	326.4
3/4-10	**160**	217.6	**260**	353.6	**386**	525.0
3/4-16	**180**	244.8	**300**	408.0	**420**	571.2
7/8-9	**140**	190.4	**400**	544.0	**600**	816.0
7/8-14	**155**	210.8	**440**	598.4	**660**	897.6
1-8	**220**	299.2	**580**	788.8	**900**	1,244.0
1-12	**240**	326.4	**640**	870.4	**1,000**	1,360.0

NOTES

1. These torque values are to be used for all hardware excluding: locknuts, self-tapping screws, thread forming screws, sheet metal screws and socket head setscrews.
2. Recommended seating torque values for locknuts:
   a. for prevailing torque locknuts - use 65% of grade 5 torques.
   b. for flange whizlock nuts and screws - use 135% of grade 5 torques.
3. Unless otherwise noted on assembly drawings, all torque values must meet this specification.

Common Hardware Types

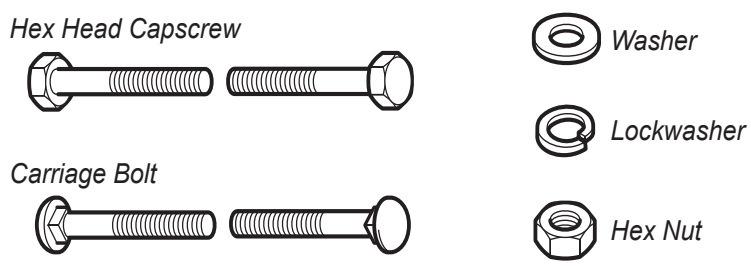

Wrench & Fastener Size Guide

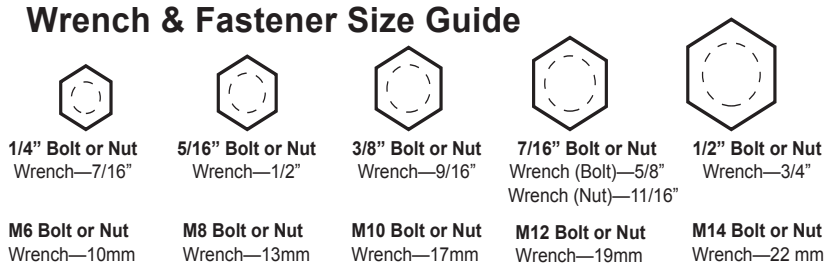

Copyright © Briggs & Stratton. All Rights reserved

20-May-2024