Parts Manual

Mfg. No: 5902012

FB1000 Hurricane Series Ride-On Debris Blowers

Copyright © Briggs & Stratton. All Rights reserved

20-May-2024

5601318 - LED Headlight Kit. . . . . .
5109808 - Tire, Debris Blower Pavement Tire 20X8.00-8. . . . . .

Not For Reproduction

Model Components

Page

Blower Group. 4
Decal Group - Brand and Model. 6
Decal Group - Safety and Operation. 8
Deflector Control Group. 10
Electrical Group. 12
Electrical Schematic. 14
Engine Group. 16
Fuel Tank and Mount Group. 18
Hydraulic Group. 20
Instrument Control Panel Group. 22
Main Frame Group. 24
Motion Control Group. 26
Neutral Lock Group. 28
Operator Area Group. 30
Parking Brake Group. 32
Wheel and Tire Group. 34
Torque Specification Chart. 36

Not For Reproduction

Copyright © Briggs & Stratton. All Rights reserved

Blower Group

Note: Unless noted otherwise, use the standard torque specifications

Mfg. No: 5902012

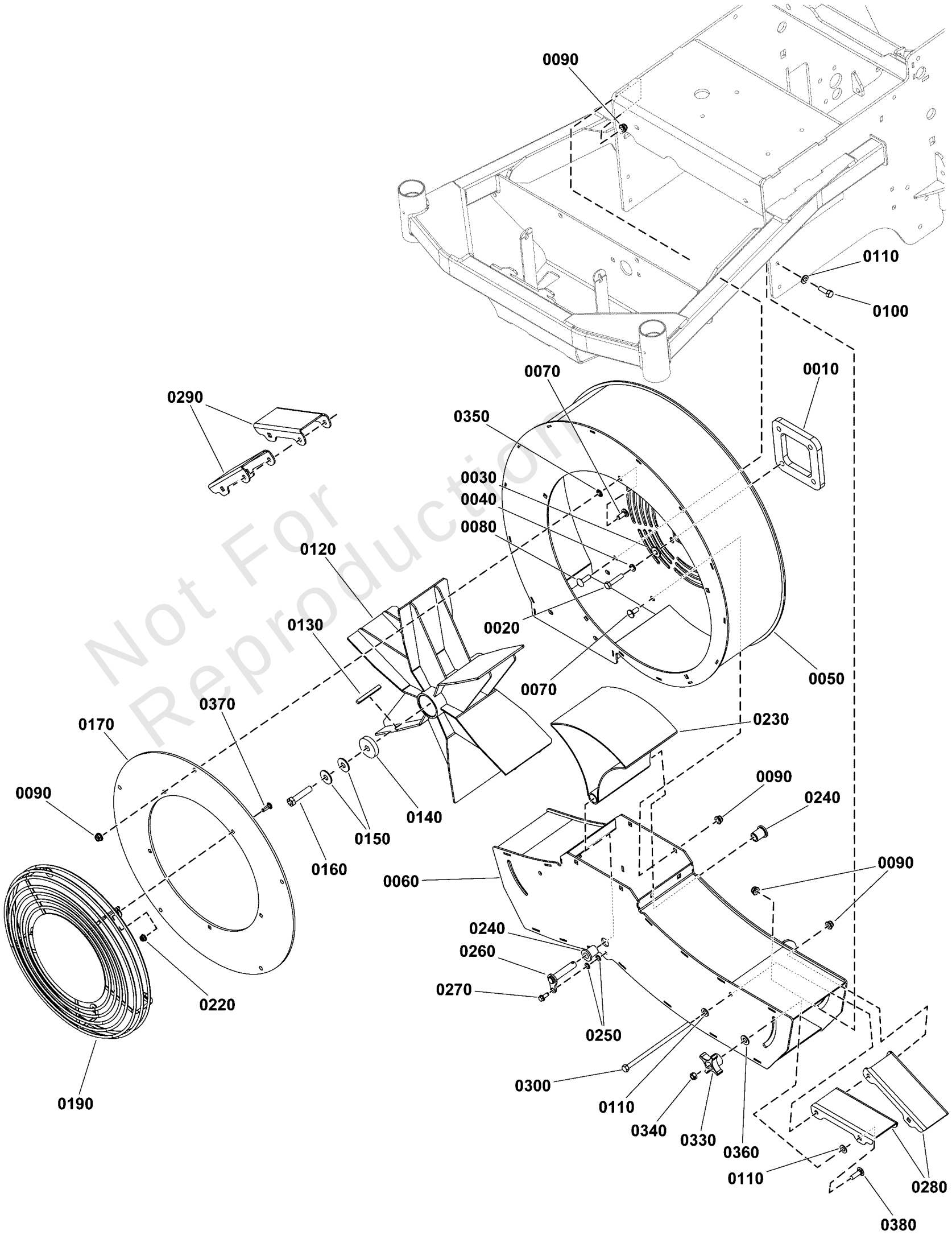

Not For Reproduction

Copyright © Briggs & Stratton. All Rights reserved

Blower Group

REF NO	PART NO	QTY	DESCRIPTION
0010	5420587AA	1	SPACER, MOTOR PLATE, FB1000 - BLK
0020	5025025X12	4	BOLT, 5/16-24 X 1-1/2, GD8, PHOS
0030	5025337	4	WASHER, 5/16" USS
0040	5025170	4	WASHER, 5/16 LOCK CZ
0050	5420485AI	1	WELD, TOP, BLWR HSG, FB1000 - RED
0060	5420480AI	1	WELD, BOTTOM, BLWR HSG, FB1000 - RED
0070	-----	11	RHSSNB,5/16-18 X 3/4 GR5 ZINC/CLEAR
0080	80004565	2	BOLT,5/16-18X1.000,SHORT NECK CRRG,ZC/CL
0090	5025392	19	NUT, 5/16-18 HEX NYLOCK FLANGE NUT
0100	5025011X8	4	BOLT, 5/16-18 X 1" GRD5 YZ
0110	5025155	10	WASHER, 5/16" SAE
0120	5420582	1	WELD, IMPELLER, FB1000
0130	5050407X20	1	KEY, 1/4 SQ X 2-1/2
0140	5106924	1	WASHER, IMPLR, 1-3/4OD X 7/16ID
0150	5025585	2	BELLEVILLE WASHER, 1.1875 X .442 X .098
0160	5102862	1	BOLT, CRANKSHAFT, 7/16"X2
0170	5420490A	1	PLATE,FRONT COVER, BLWR, FB1000 - BLK
0190	440171A	1	GRILL WIRE FORCE - BLACK
0220	5025391	5	NUT, 1/4-20 Hex Nylock Flange
0230	5420534AA	1	WELD, DEFLECTOR, FB1000 - BLK
0240	5106943	2	BUSHING, 1/2 X 3/4 X 1F
0250	5025169	2	WASHER, 1/4 LOCK
0260	5107337	1	WELD, FORWARD DEFLECTOR PIN, CZ
0270	80004190	1	SCREW, Hex Washer Head, Thread Roll, 1/4-20 x 5/8
0280	5420595AA	2	PLATE,LEFT DEFLECTOR, FB1000 - BLK
0290	5421429AA	2	PLATE,RIGHT DEFLECTOR, FB1000 - BLK
0300	5025011X56	2	BOLT, 5/16-18 x 7
0330	1670578	4	KNOB-INT THR .312-18 4-ARM 2.12WD 1.06LG
0340	80003675	4	NUT, 5/16-1/8, HEX, CNTR LK, ZINC PHOS/OIL
0350	-----	5	RETAINER,5/16X0.625,PUSHNUT,ZINC/CLEAR
0360	5025698	4	WASHER, 5/16 NYLON, BLK
0370	-----	5	SCREW-TRUSS HD TORX DR 1/4-20X0.750 ZC/C
0380	80004446	4	BOLT,5/16-18X1 1/4,GR5,CRRG,ZINC/CLEAR

Not For Reproduction

Copyright © Briggs & Stratton. All Rights reserved

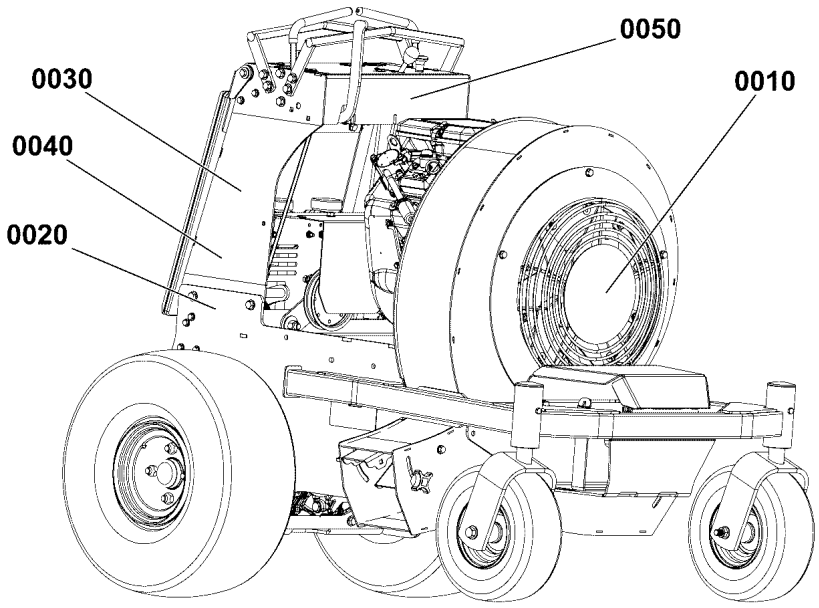

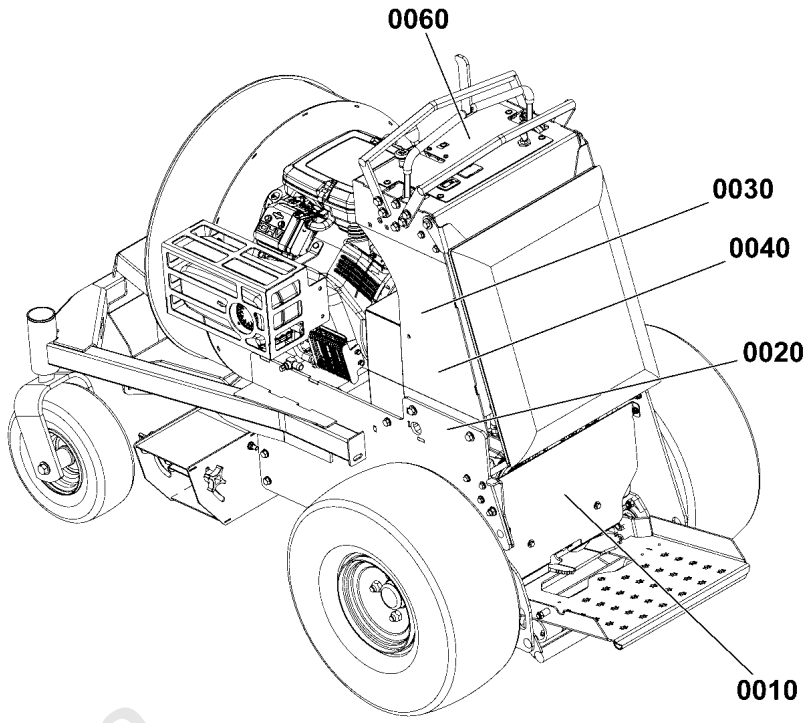

0030

0010

0040

0050

0020

0060

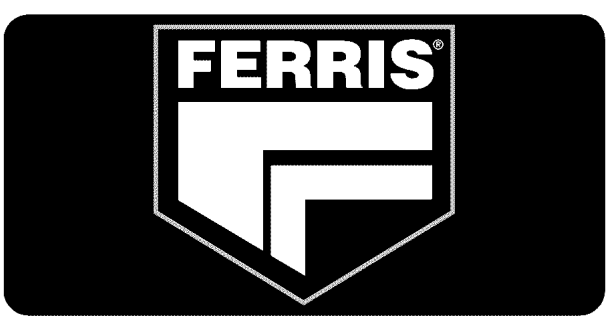

Not For Production

Decal Group - Brand and Model

REF NO	PART NO	QTY	DESCRIPTION
0010	5104755FS	2	DECAL, BRAND
0020	80082701	2	DECAL, POWERED BY VANGUARD
0030	5104724	2	DECAL, FERRIS LOGO, MEDIUM
0040	5109617	2	DECAL, FERRIS, FB1000
0050	5103799	1	DECAL, FERRIS, 2.23" X 11.39"
0060	5109618	1	DECAL, CONTROL PANEL FERRIS SHIELD

Not For Reproduction

Copyright © Briggs & Stratton. All Rights reserved

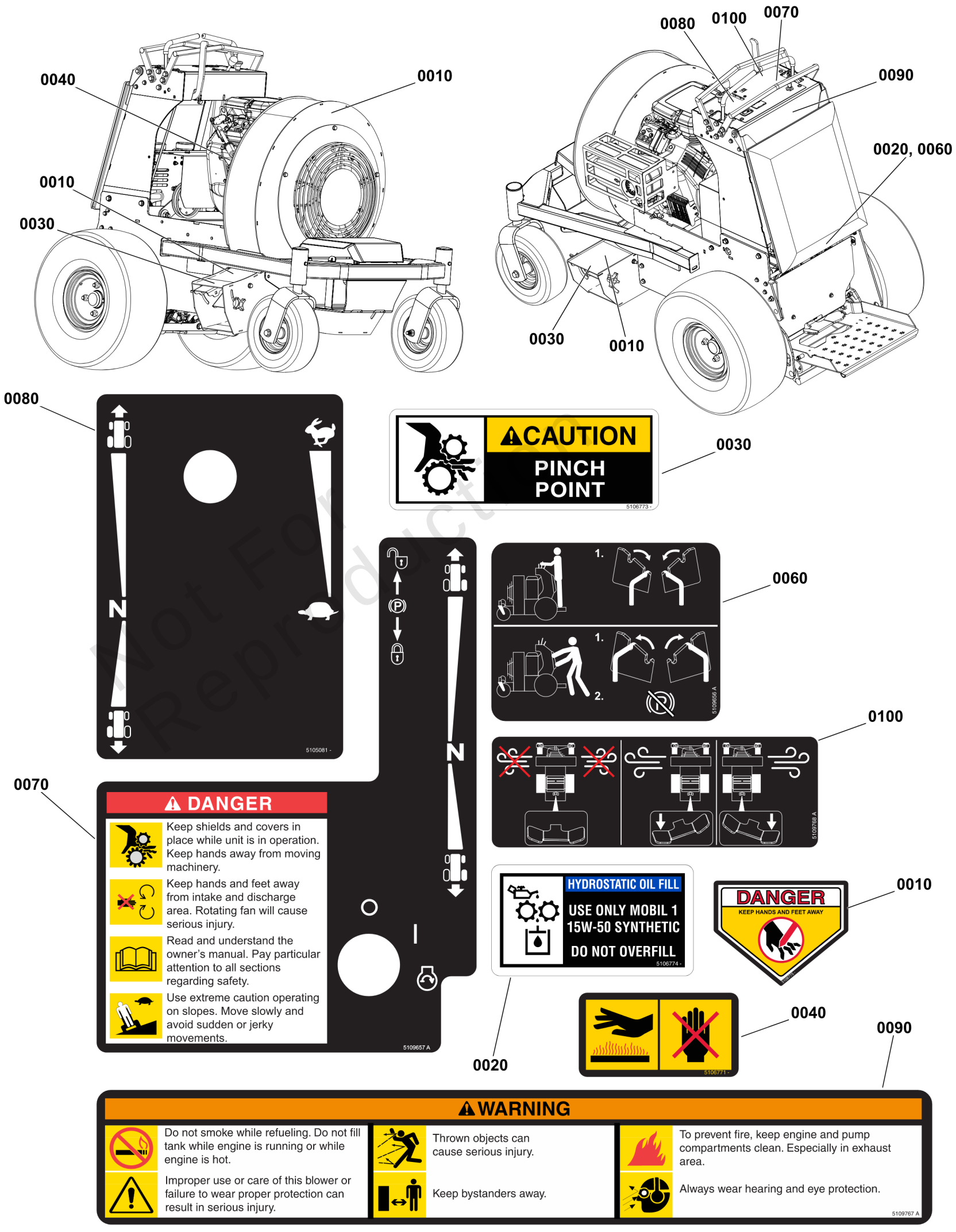

Not For Reproduction

Decal Group - Safety and Operation

REF NO	PART NO	QTY	DESCRIPTION
0010	5106775FS	3	DECAL
0020	5106774FS	1	DECAL -(Located on hydraulic tank mount beneath knee pad.)
0030	5106773FS	2	DECAL, Warning/Safety
0040	5106771FS	1	DECAL, WARNING, HOT SURFACE -(Located on blower housing by engine manifold.)
0060	5109656FS	1	DECAL, INSTRUCTION -(Located on hydraulic tank mount beneath knee pad.)
0070	5109657FS	1	DECAL, CONTROLS
0080	84008405	1	DECAL, Controls
0090	5109767FS	1	DECAL
0100	5109768FS	1	DECAL, Controls

Not For Reproduction

Copyright © Briggs & Stratton. All Rights reserved

Deflector Control Group

Note: Unless noted otherwise, use the standard torque specifications

Mfg. No: 5902012

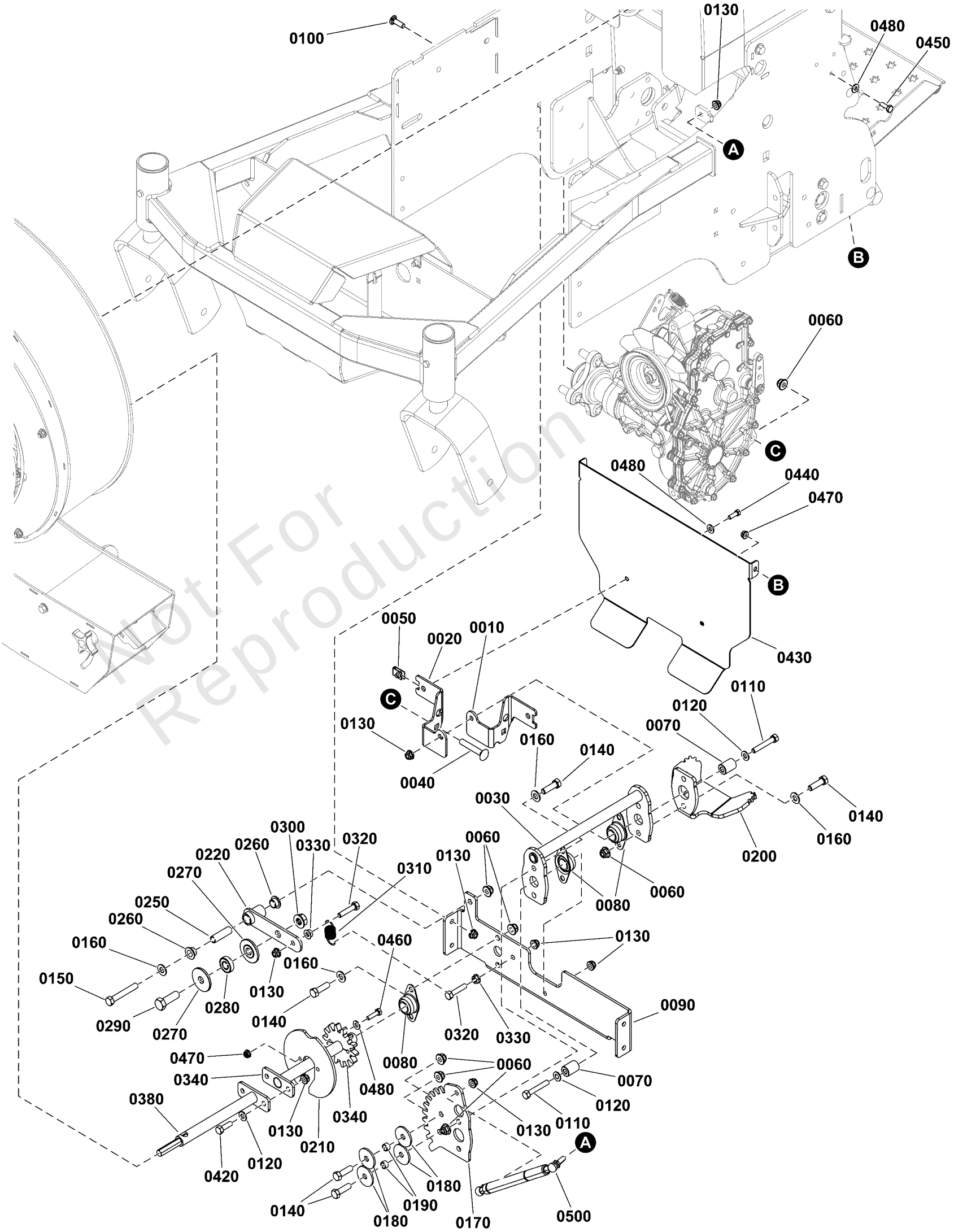

Not For Reproduction

Copyright © Briggs & Stratton. All Rights reserved

Deflector Control Group

REF NO	PART NO	QTY	DESCRIPTION
0010	5421771AA	1	PLATE, TOE KICK MOUNT, LH ,FB1000 - BLK
0020	5421772AA	1	PLATE, TOE KICK MOUNT, RH, FB1000 - BLK
0030	5421775AA	1	WELD, FOOT DEFLECTOR SHAFT - BLK
0040	7900009	2	RHSSNB, 3/8-16 X 2-1/4, GR5
0050	5022665	2	BODY CLIP, 1/4-20 X 1/2" DEEP
0060	5025394	11	NUT, 3/8 - 16 HEX NYLOCK FLANGE
0070	5042134	2	SPACER, .32 X .75 X 1.06, PM
0080	5021098	3	BEARING, BRONZE FLANGE, 3/4"
0090	5421674AA	1	PLATE, BRNG MOUNT, FB1000 - BLK
0100	5025145X8	4	BOLT, 5/16-18 X 1, CARRIAGE, GD5, CZ
0110	5025011X16	2	BOLT, 5/16-18 X 2" GD5 YZ
0120	5025155	4	WASHER, 5/16" SAE
0130	5025392	12	NUT, 5/16-18 HEX NYLOCK FLANGE NUT
0140	5025013X10	8	BOLT, 3/8-16 X 1-1/4" GD5 CZ
0150	5025013X20	1	BOLT, 3/8-16 X 2-1/2" GD5 CZ
0160	5025156	7	WASHER, 3/8 SAE
0170	5421533AA	1	PLATE, SPUR GEAR BIG, FB1000 - BLK
0180	5100548	4	WASHER, .390 X 1.50 X .109, YZ
0190	5041930	2	SPACER, .38 X .50 X .27, CZ
0200	5421774A	1	PLATE, FOOT PEDAL, FB1000 - BLK
0210	5421792AA	1	PLATE, GEAR & DETENT GUIDE, FB1000 - BLK
0220	5421658AA	1	WELD, FOOT DEFLECTOR ARM, FB1000 - BLK
0250	5107740	1	SPACER, .38 X .50 X 1.63, CZ
0260	5107741	2	BUSHING, IGUS, .50ID X .63OD X .38
0270	5103262	2	SPACER, IDLER ARM, 1/2, PM
0280	7078243	1	BEARING, BALL, AXLE
0290	5025017X12	1	BOLT, 1/2-13 X 1-1/2 GD5 CZ
0300	5025396	1	NUT, Hex Flange, Nylock, 1/2-13
0310	5010213	1	SPRING-EXT, .740 ODX2.025LGX.072WR, BLK
0320	5025011X12	2	BOLT, 5/16-18 X 1-1/2" GD5 YZ
0330	5025127	2	NUT, 5/16-18 HEX SERRATED FLANGE (SMALL)
0340	5421791AA	1	WELD, DEFLECTOR CTRL, REAR,FB1000 - BLK
0380	5421790AA	1	WELD, DEFLECTOR CTRL, FRONT,FB1000 - BLK
0420	5025011X8	2	BOLT, 5/16-18 X 1" GRD5 YZ
0430	5420561B	1	PLATE, TOE KICK, FB1000 - RED
0440	-----	2	HHCS, 1/4-20 X 0.625, GR5, ZINC/CLEAR
0450	5025010X6	2	BOLT, 1/4"-20 X 3/4" GD5 YZ
0460	5025010X8	2	BOLT, 1/4-20 X 1" GD5 CZ
0470	5025391	4	NUT, 1/4-20 Hex Nylock Flange
0480	5025154	6	WASHER, 1/4 SAE
0500	5109913	1	DAMPENER, ANFAN, METAL ENDS

Not For Reproduction

Electrical Group

Note: Unless noted otherwise, use the standard torque specifications

Mfg. No: 5902012

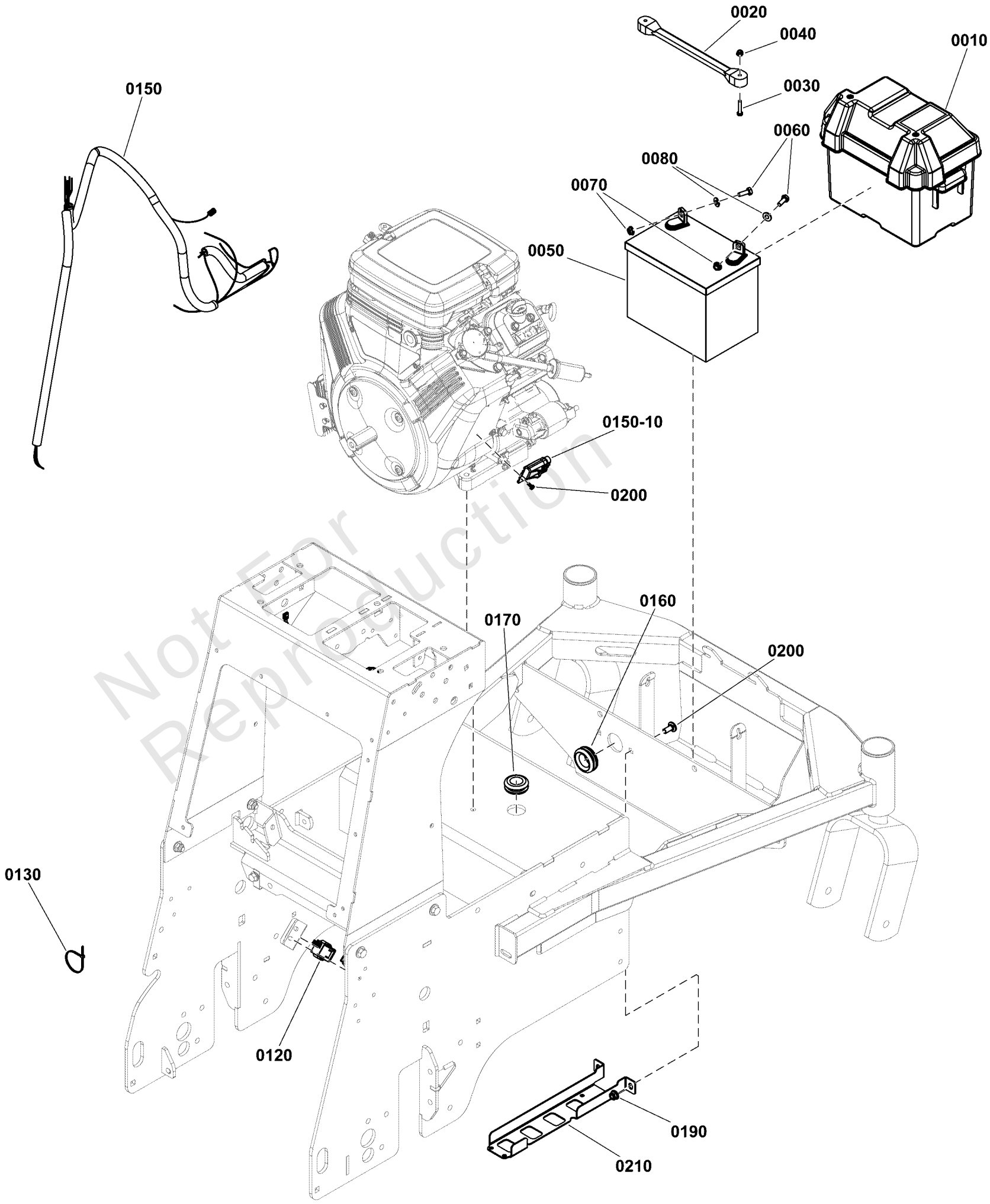

Not For Reproduction

Copyright © Briggs & Stratton. All Rights reserved

Electrical Group

REF NO	PART NO	QTY	DESCRIPTION
0010	5100688YP	1	BATTERY BOX, W/ DRAIN
0020	5021670SM	1	STRAP, RUBBER
0030	5025270SM	2	SCREW, #10-24 X 1" RS
0040	5025271FS	2	NUT
0050	-----	1	BATTERY, 11U1L, 350 CCA -(BCIU1, 350 CCA)
0060	5025010X6SM	2	BOLT, 1/4-20 X 3/4" G
0070	5025126FS	2	NUT
0080	703332	2	WASHER
0090	5105300FS	1	CABLE, BATTERY, RED
0100	5050927X39FS	1	WIRE, LOOM
0110	5045894YP	1	BATTERY CABLE, NEG, 35, 1/4-5/16
0120	84006599	1	SWITCH
0130	5021030SM	9	TIE WRAP, 5-1/2" LONG
0140	5025470YP	1	SCREW,SELF-TAP,#8-32
0150	5109531FS	1	HARNESS, WIRING
0150-10	5021603SM	1	FUSE, ATO, 20 AMP
0160	5106788FS	1	GROMMET, RUBBER
0170	5103944YP	1	GROMMET, 7/8"ID
0190	703115	2	NUT
0200	703185	2	BOLT, Round Head, Short Square Neck
0210	5421965AFS	1	PLATE

Not For Reproduction

Copyright © Briggs & Stratton. All Rights reserved

5109531 MAIN WIRE HARNESS - BRIGGS & STRATTON 356447 ENGINES

5109531A

(If internal schematic of the switch is not shown, the image of the switch represents the back view of the connector as it is connected to the switch.)

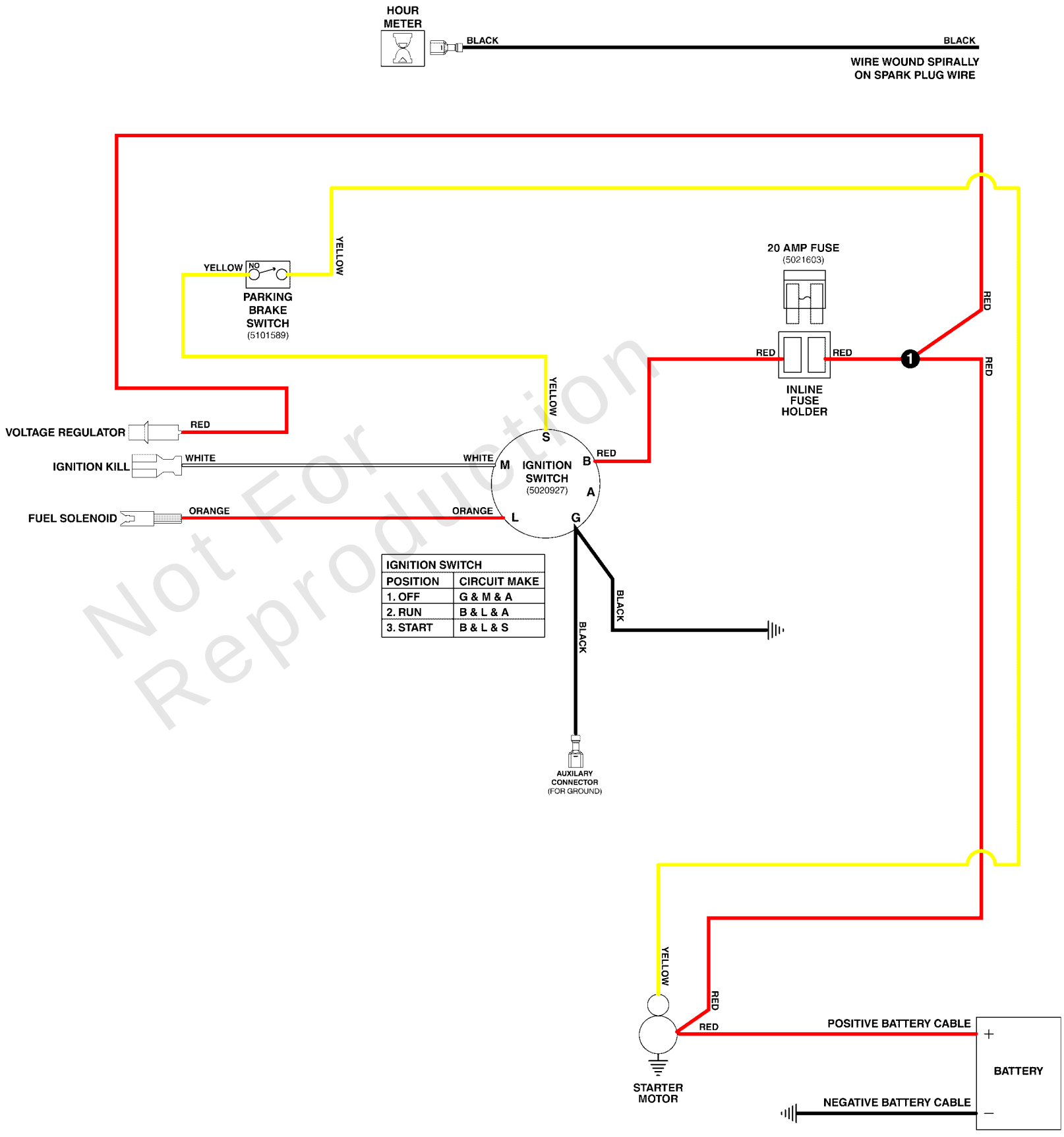

IGNITION SWITCH	
POSITION	CIRCUIT MAKE
1. OFF	G & M & A
2. RUN	B & L & A
3. START	B & L & S

Not For Reproduction

Electrical Schematic

REF NO	PART NO	QTY	DESCRIPTION
5109531	5109531FS	1	HARNESS, WIRING
5021603	5021603SM	1	FUSE, ATO, 20 AMP
5101589	84006599	1	SWITCH
5020927	5020927FS	1	SWITCH, IGNITION

Not For Reproduction

Copyright © Briggs & Stratton. All Rights reserved

Note: Unless noted otherwise, use the standard torque specifications Mfg. No: 5902012

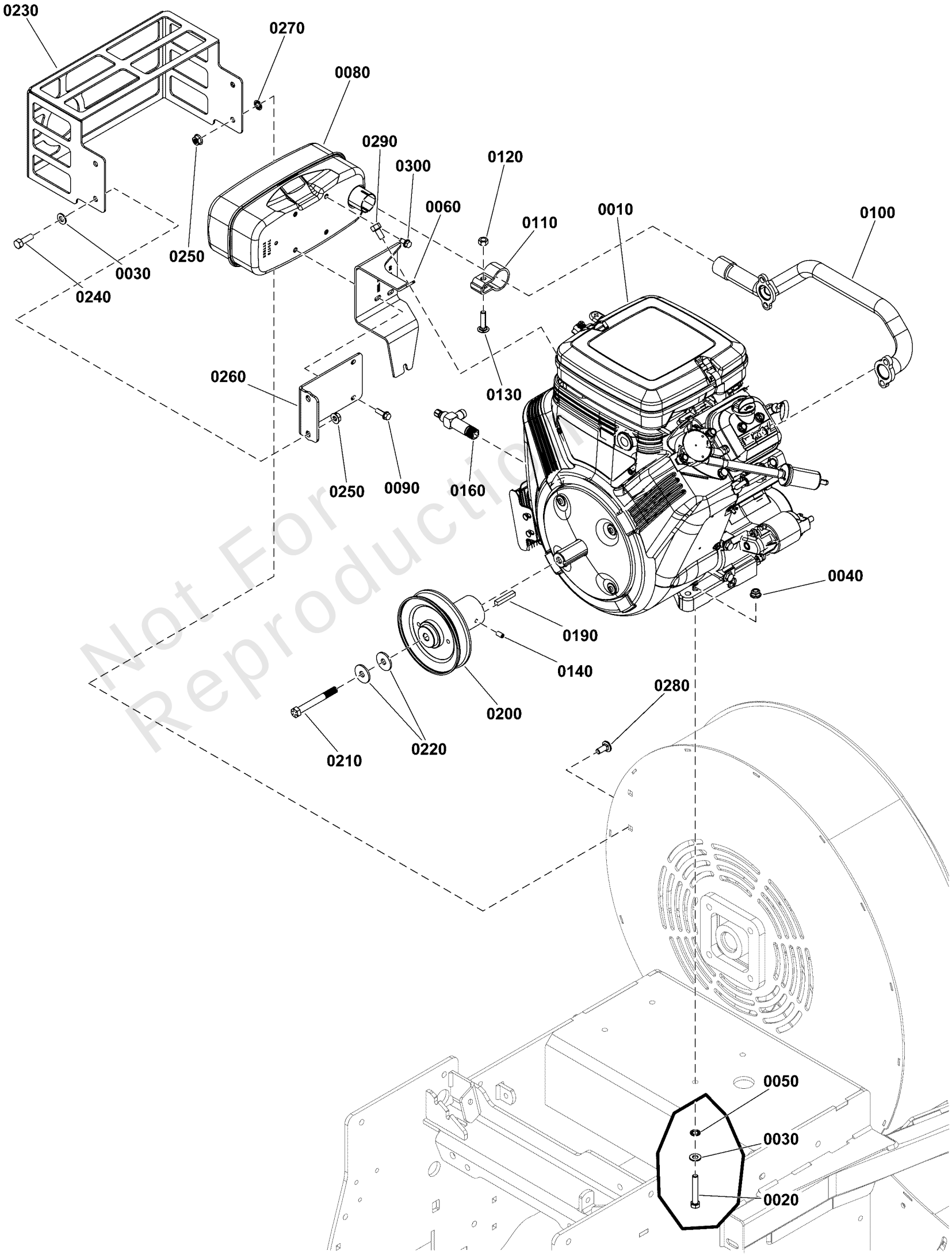

Not For Reproduction

Copyright © Briggs & Stratton. All Rights reserved

Engine Group

REF NO	PART NO	QTY	DESCRIPTION
0010	-----	1	ENGINE, 356447-3545-G1 -(See engine manufacturer for engine service parts.)
0020	5025025X16	4	BOLT, 5/16-24 x 2" GD 8
0030	703350	6	WASHER
0040	5025616YP	4	NUT
0050	5025188SM	4	WASHER, 5/16" INT. TO
0060	806759	1	BRACKET, Muffler -(Order replacement component from your authorized Briggs & Stratton service parts provider.)
0080	498984S	1	MUFFLER -(Order replacement component from your authorized Briggs & Stratton service parts provider.)
0090	703466	2	BOLT, GR5, 1/4X.0750
0100	805609	1	MANIFOLD, Exhaust -(Order replacement component from your authorized Briggs & Stratton service parts provider.)
0110	691956	1	CLAMP, Muffler -(Order replacement component from your authorized Briggs & Stratton service parts provider.)(Includes items #0120 and 0130.)
0120	691105	1	LOCKNUT
0130	-----	1	BOLT, ROUND HEAD SQUARE NECK
0140	5107269FS	2	SET SCREW
0160	5107284FS	1	VALVE, OIL DRAIN SHUT OFF
0190	5022726YP	1	KEY 1/4 SQ X 1 1/2
0200	5109829FS	1	PULLEY
0210	01X144MA	1	BOLT, 3/8-24 NF x 3-1/4" Hex Head, GR 8
0220	5025693FS	2	WASHER, Beveled
0230	5421920AFS	1	MUFFLER, GUARD
0240	5025011X8FS	2	BOLT
0250	5025127SM	4	NUT, 5/16-18 HEX SERR
0260	5421452AFS	1	GUARD
0270	703297	2	RETAINER, GR5, 5/16
0280	703185	2	BOLT, Round Head, Short Square Neck
0290	703987	1	CAPSCREW, M8-1.25X16
0300	704130	2	SCREW, HEX, 1/4-20X.5

Not For Reproduction

Copyright © Briggs & Stratton. All Rights reserved

Fuel Tank and Mount Group

Note: Unless noted otherwise, use the standard torque specifications

Mfg. No: 5902012

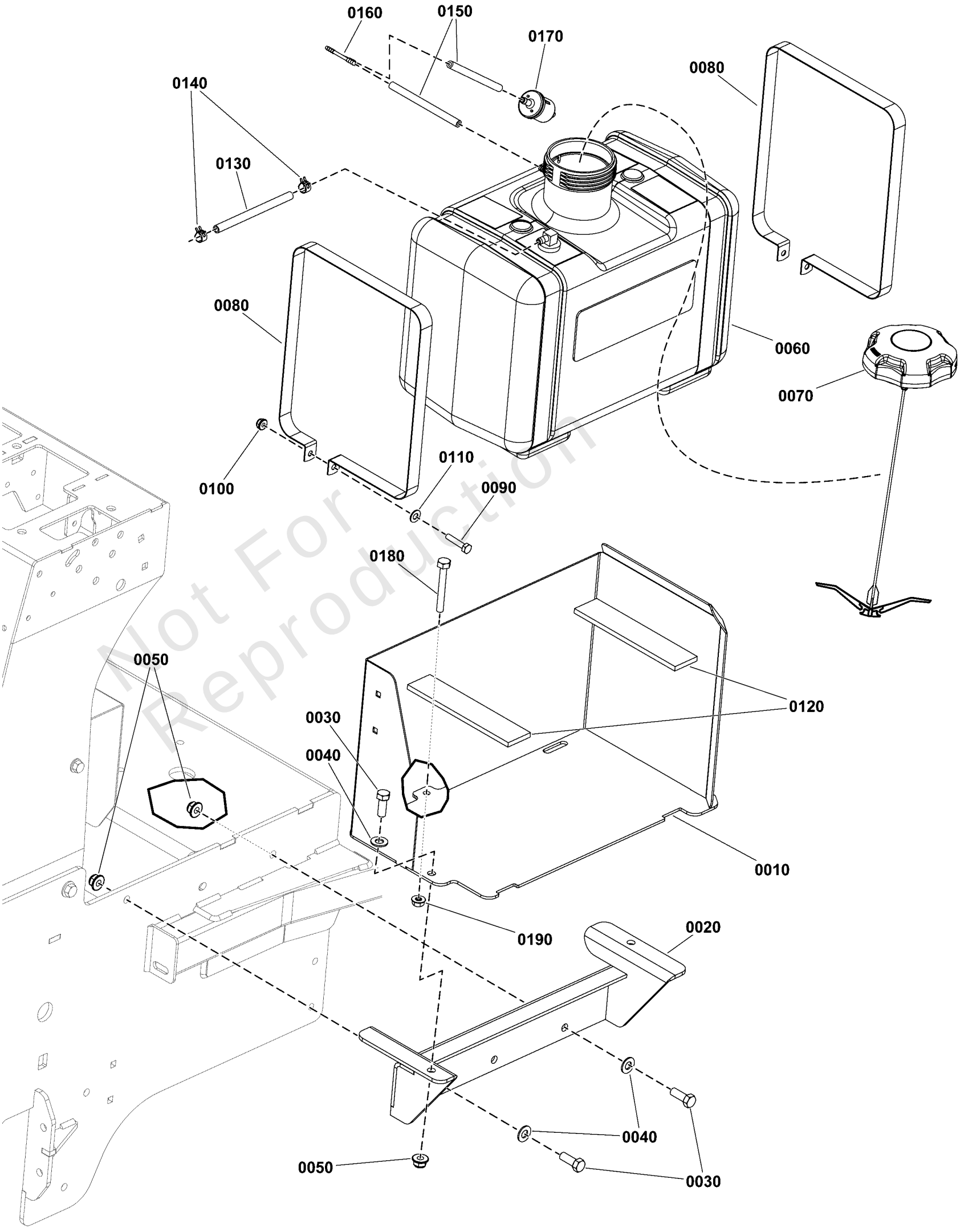

Not For Reproduction

Copyright © Briggs & Stratton. All Rights reserved

Fuel Tank and Mount Group

REF NO	PART NO	QTY	DESCRIPTION
0010	5420585AFS	1	MOUNT, TANK
0020	5421231A	1	WELD, FUEL TANK MOUNT,LOWER, FB1000-BLK
0030	5025013X8SM	5	BOLT, 3/8-16 X 1" GD5
0040	5025156FS	5	WASHER
0050	5025394SM	5	NUT, 3/8-16 HEX NYLOCK
0060	5102833YP	1	TANK, 5 GAL
0060-10	84009482	1	GROMMET -(Grommet for fuel tank 5102833)
0070	84005958	1	CAP, FUEL TANK
0080	5403445AYP	2	STRAP, FUEL TANK
0090	5025010X12SM	2	BOLT, 1/4-20
0100	5025391FS	2	NUT
0110	703332	2	WASHER
0120	5100810YP	2	PAD, RUBBER MOUNT
0130	5050831X5SM	1	HOSE - 5"
0140	691038	2	CLAMP, Hose
0150	7700552X4P5YP	2	HOSE, VAPOR
0160	5103062YP	1	FITTING, 3/16" TEE, B
0170	84001895	1	FILTER, Fuel
0180	5025055X20FS	1	BOLT
0190	5025127SM	1	NUT, 5/16-18 HEX SERR

Not For Reproduction

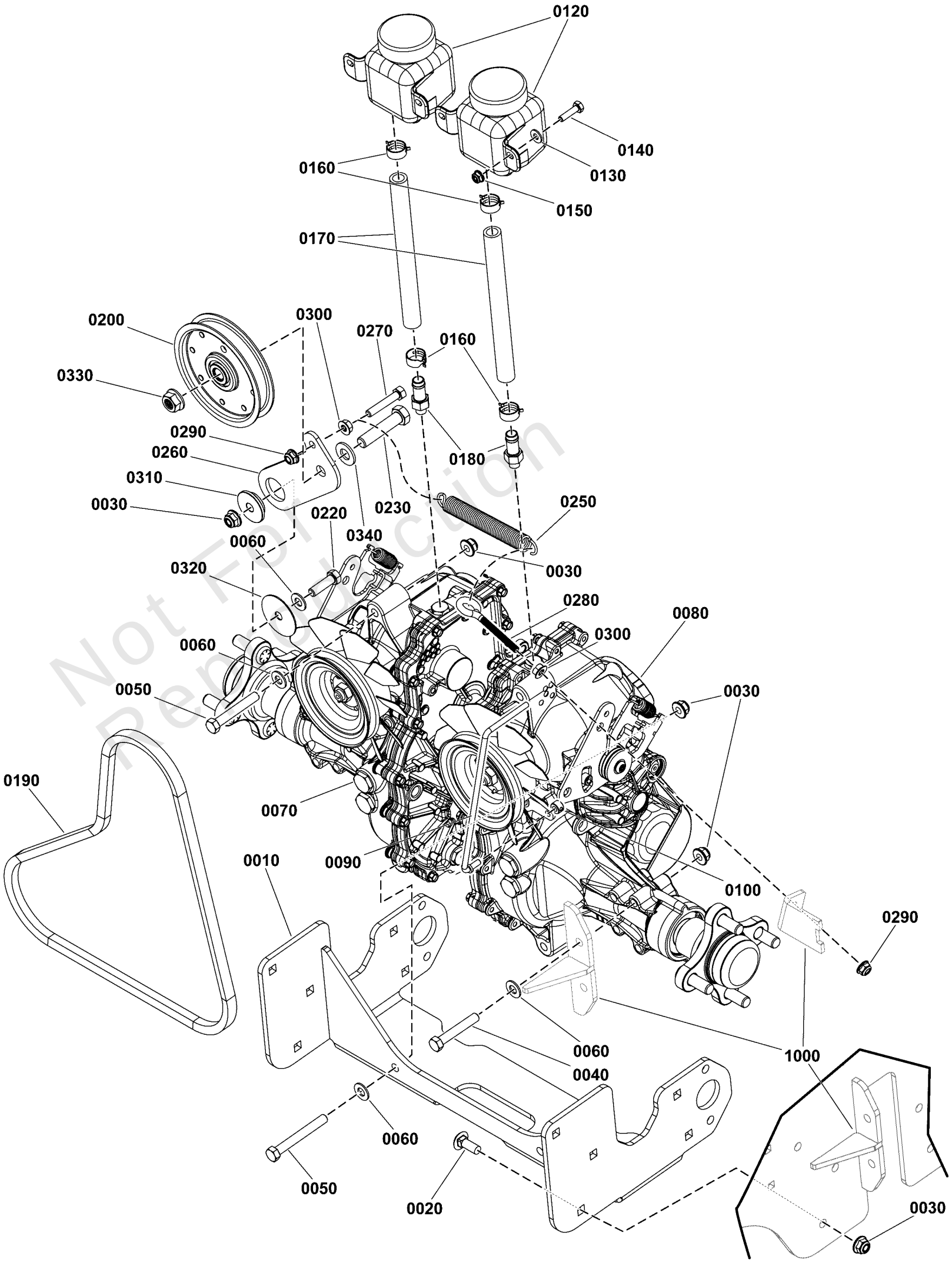

Not For Reproduction

Hydraulic Group

REF NO	PART NO	QTY	DESCRIPTION
0010	5421310AFS	1	SUPPORT, TRANSAXLE
0020	703814	10	BOLT, RD HD, 3/8-16X1
0030	5025394SM	19	NUT, 3/8-16 HEX NYLOCK
0040	5025013X24SM	4	BOLT, 3/8-16 X 3" GD5
0050	84007037	4	BOLT
0060	5025156FS	9	WASHER
0070	84006968	1	TRANSAXLE
0080	84006969	1	TRANSAXLE
0090	5109270FS	2	ROD
0100	5022481SM	2	COLLAR, 1/4" SET
0120	5100473SM	2	RESERVOIR
0120-10	5100778X1YP	2	RESERVIOR CAP (SV) -(Not an illustrated part.)
0130	703332	4	WASHER
0140	5025010X8SM	4	BOLT, 1/4-20 X 1", GD
0150	5025391FS	4	NUT
0160	5025474SM	4	CLAMP - HOSE
0170	5050857X8FS	2	HOSE
0180	5107224FS	2	FITTING
0190	5109484FS	1	BELT
0200	5109471FS	1	PULLEY, IDLER
0220	5025013X10SM	1	BOLT, 3/8-16 X 1-1/4"
0230	5025017X18SM	1	BOLT, 1/2-13
0250	5109476FS	1	SPRING
0260	5421961AAFS	1	PLATE
0270	5025011X14SM	1	BOLT, 5/16-18 X 1-3/4
0280	5025141X26YP	1	EYE BOLT, 5/16-18 X 3
0290	703115	2	NUT
0300	5025127SM	2	NUT, 5/16-18 HEX SERR
0310	706128	1	SPACER, IDLER
0320	5025695	1	WASHER, 0.406 X 2.00 X 0.0465, CZ
0330	770225	1	NUT
0340	5025158SM	1	WASHER, 1/2" SAE
1000	-----	1	Refer to: Main Frame Group

Not For Reproduction

Copyright © Briggs & Stratton. All Rights reserved

Instrument Control Panel Group

Note: Unless noted otherwise, use the standard torque specifications

Mfg. No: 5902012

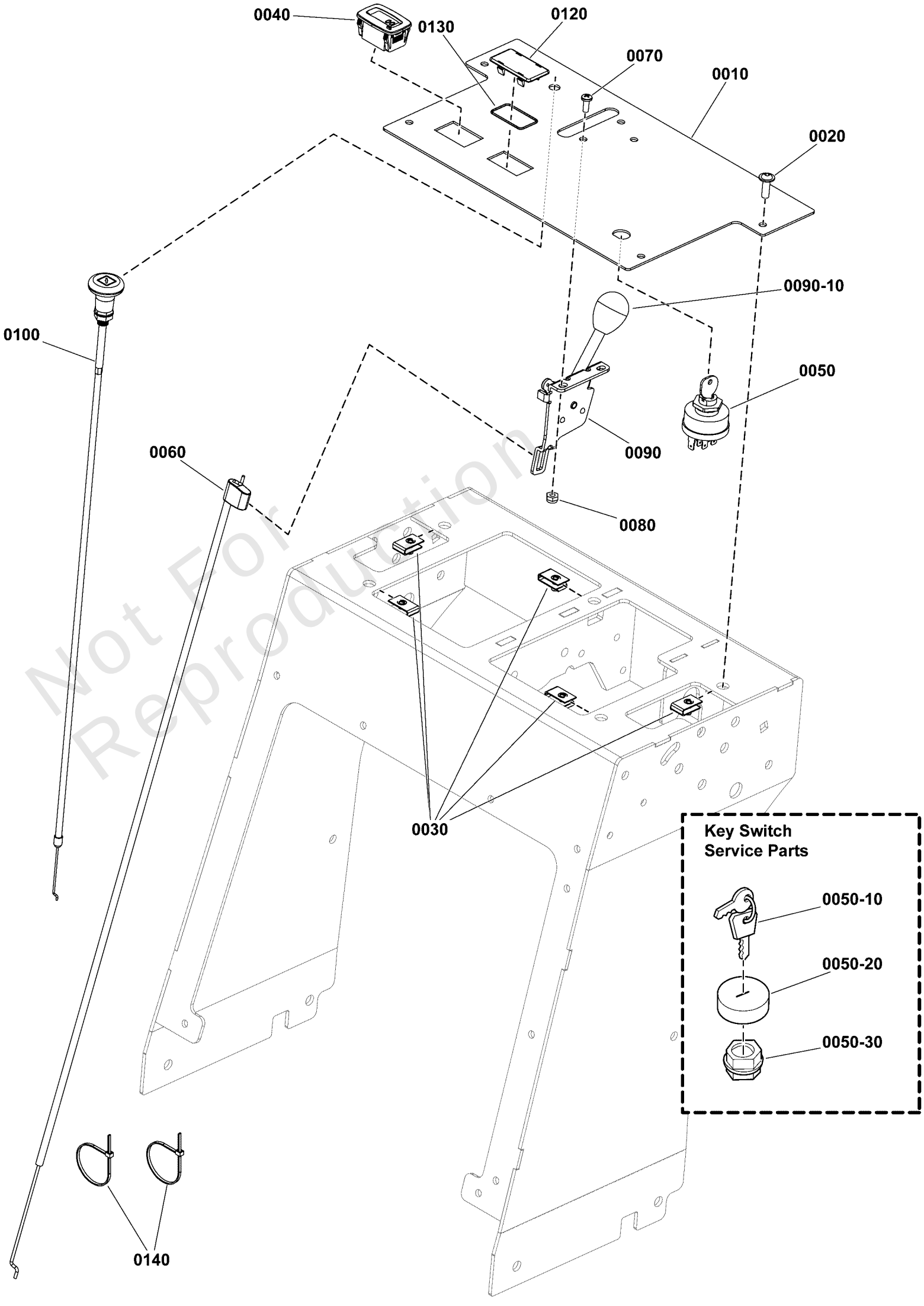

Not For Reproduction

Copyright © Briggs & Stratton. All Rights reserved

Instrument Control Panel Group

REF NO	PART NO	QTY	DESCRIPTION
0010	5601332	1	DASH PANEL W/ DECALS, FB1000 -(Includes decals).
0020	5106757	5	SCREW, FLANGE, ALLEN HD, 1/4-20 X .75 SS
0030	5022665	5	BODY CLIP, 1/4-20 X 1/2" DEEP
0040	5106789	1	HOUR, METER & TECH
0050	5020927	1	SWITCH, IGNITION, 6 POST
0050-10	5022789	1	KEY, IGNITION MOLDED SET -(SV)
0050-20	5022790	1	COVER, PLASTIC, SNAP ON -(SV)
0050-30	5022791	1	PLASTIC NUT -(SV)
0060	5109627	1	CABLE, THROTTLE, 27.75
0070	5025179X4	2	SCREW, #10-24 X 1/2" ROUND PHILLIPS
0080	5025271	2	NUT, Hex, Nylon Lock, #10-24
0090	5101995	1	LEVER, HEAVY DUTY, THROTTLE CONTROL
0090-10	5046360X1	1	THROTTLE CONTROL HANDLE/KNOB
0100	5109628	1	CABLE, CHOKE CONTROL, 21.75
0120	1722611	1	PLUG, Hole (Black Plastic)
0130	5022269	1	O-RING, 7/8" ID X 1/16" W
0140	5021030	2	TIE, SELF-LOCKING, 6"

Not For Reproduction

Main Frame Group

Note: Unless noted otherwise, use the standard torque specifications

Mfg. No: 5902012

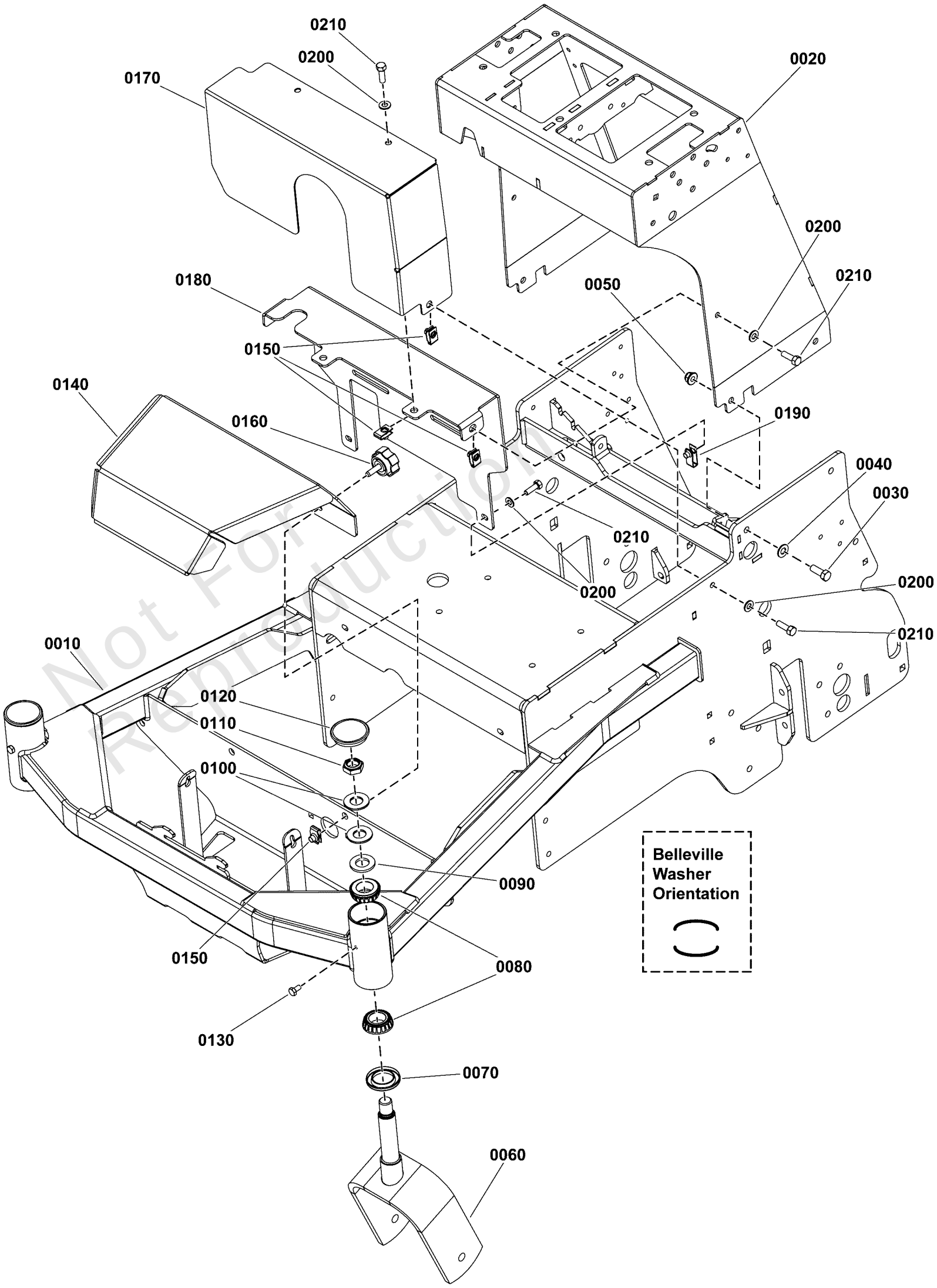

Not For Reproduction

Copyright © Briggs & Stratton. All Rights reserved

Main Frame Group

REF NO	PART NO	QTY	DESCRIPTION
0010	-----	1	FRAME
0020	5420514AI	1	WELD, CONTROL TOWER, FB1000 - RED
0030	5025013X8	4	BOLT, 3/8-16 X 1" GD5 CZ
0040	5025156	4	WASHER, 3/8 SAE
0050	5025394	4	NUT, 3/8 - 16 HEX NYLOCK FLANGE
0060	5402539AI	2	WELD, CASTER YOKE - TEXTURED RED
0070	5021072	2	SEAL, GREASE
0080	5020884	4	BEARING, TAPERED ROLLER, 1"
0090	5025160	2	WASHER, 3/4 SAE
0100	5025449	4	WASHER, BELLEVILLE - 1.500 X .755
0110	5025448	2	NUT, 3/4-16, HEX JAM NYLON LOCK
0120	5109845	2	CAP, GREASE, LOW PROFILE
0130	5025457	2	BOLT, 1/4-28 X 1/2, GD5 YZ
0140	5421743AI	1	PLATE, BATTERY MOUNT COVER - TEXTURED RED
0150	5022308	7	BODY CLIP, 5/16-18-7GA MATERIAL
0160	5108141	2	KNOB, 5/16-18 X 1.00, ROSETTE, BLK
0170	5420565AI	1	PLATE, BELT GUARD, FB1000 - RED
0180	5421529AA	1	PLATE, HYDRO TANK MOUNT, FB1000 - BLK
0190	5025452	2	BODY CLIP, 5/16-18 -1/4 MATERIAL
0200	5025155	7	WASHER, 5/16" SAE
0210	5025011X8	7	BOLT, 5/16-18 X 1" GRD5 YZ

Not For Reproduction

Copyright © Briggs & Stratton. All Rights reserved

Motion Control Group

Note: Unless noted otherwise, use the standard torque specifications

Mfg. No: 5902012

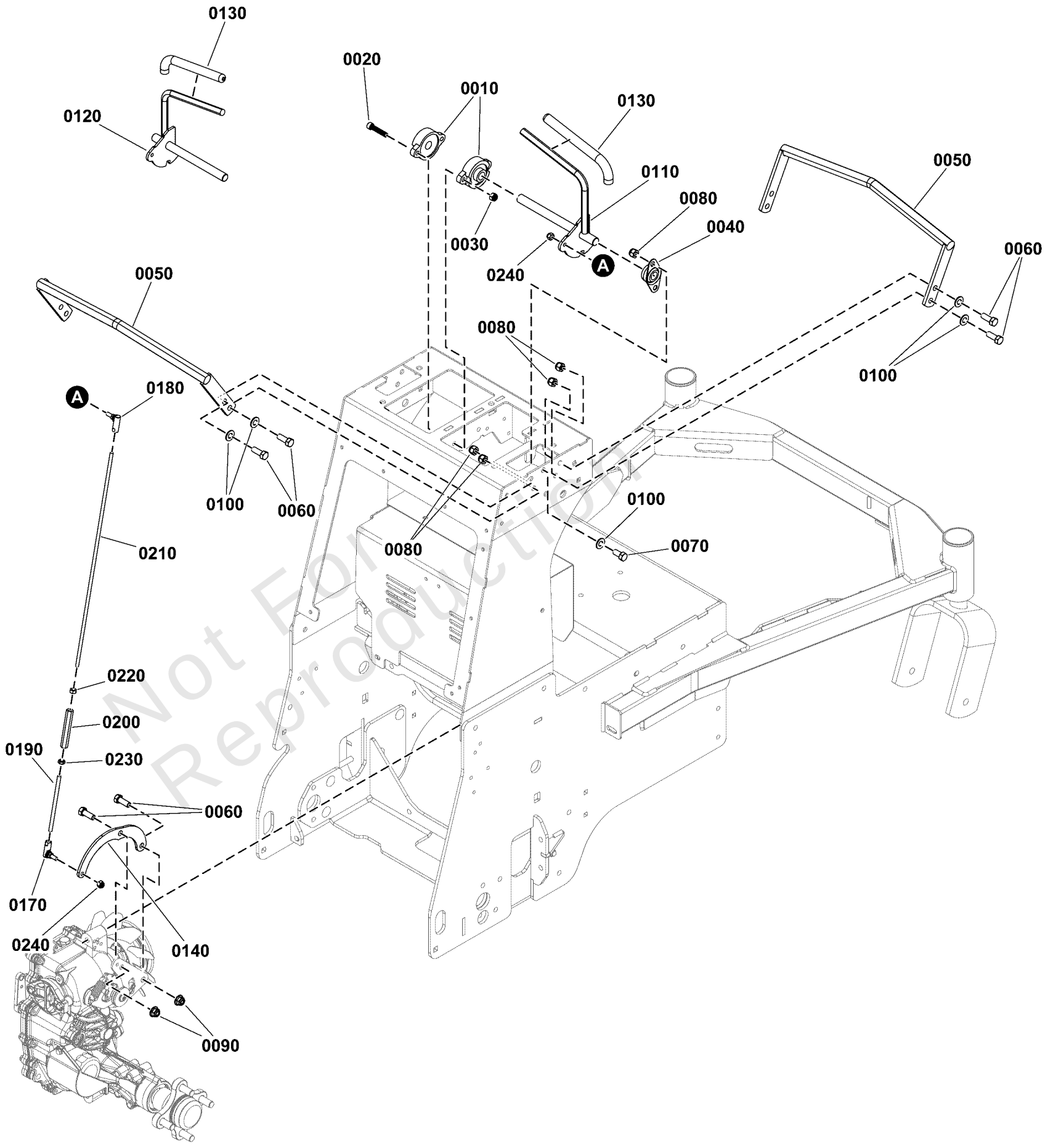

Not For Reproduction

Motion Control Group

REF NO	PART NO	QTY	DESCRIPTION
0010	5022846SM	2	BEARING, FLANGE, 5/8
0020	5025618X12FS	2	SCREW
0030	5025057FS	2	NUT
0040	5104885FS	2	BEARING
0050	5414243AAFS	2	HANDLE, REAR
0060	5025013X8SM	12	BOLT, 3/8-16 X 1" GD5
0070	5025013X6SM	4	BOLT, 3/8-16 X 3/4" G
0080	5025096SM	12	NUT, 3/8-16 HEX NYLON
0090	5025394SM	4	NUT, 3/8-16 HEX NYLOCK
0100	5025156FS	12	WASHER
0110	5420574AAFS	1	CONTROL, HANDLE
0120	5420575AAFS	1	CONTROL, HANDLE
0130	5100619FS	2	GRIP
0140	5421889AAFS	2	ARM, CONTROL
0170	5106802FS	2	JOINT, BALL
0180	5106803FS	2	JOINT, BALL
0190	5107303FS	2	ROD
0200	5106971FS	2	TUBE, CONNECTING
0210	5107239FS	2	ROD, LINK
0220	5106858FS	2	NUT
0230	7090095FS	2	NUT, 1/4
0240	5106892FS	4	NUT

Not For Reproduction

Copyright © Briggs & Stratton. All Rights reserved

Neutral Lock Group

Note: Unless noted otherwise, use the standard torque specifications

Mfg. No: 5902012

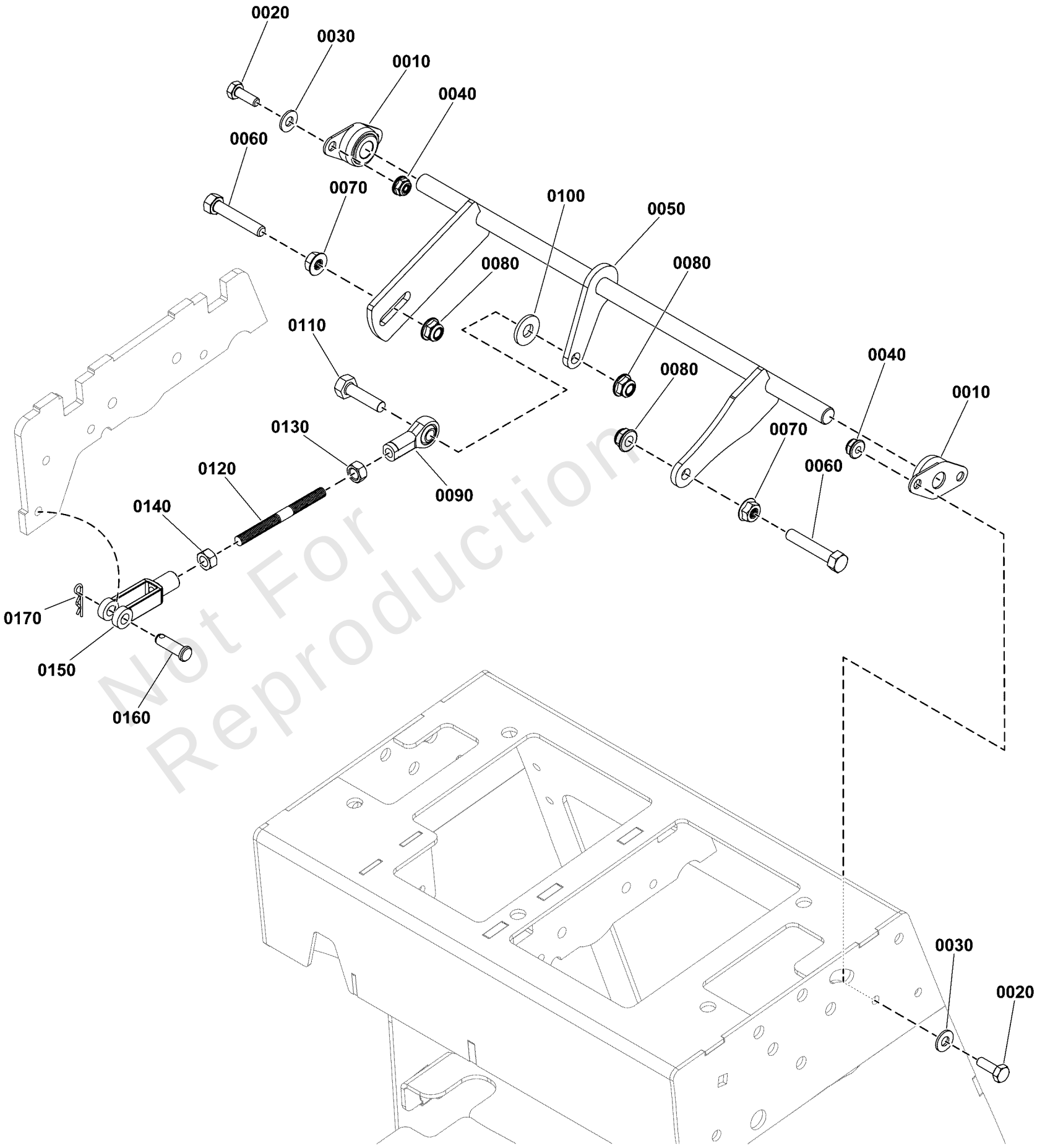

Not For Reproduction

Copyright © Briggs & Stratton. All Rights reserved

Neutral Lock Group

REF NO	PART NO	QTY	DESCRIPTION
0010	5101123SM	2	BEARING, 1/2 FLANGE
0020	5025010X6SM	4	BOLT, 1/4-20 X 3/4" G
0030	84007033	4	WASHER
0040	5025391FS	4	NUT
0050	5420577AAFS	1	LOCK, Neutral
0060	5025011X14SM	2	BOLT, 5/16-18 X 1-3/4
0070	5025127SM	2	NUT, 5/16-18 HEX SERR
0080	703115	3	NUT
0090	5104494YP	1	BALL JOINT 5/16-24 LH
0100	5025337FS	1	WASHER
0110	5025055X10YP	1	BOLT, 5/16-18 X 1-1/4
0120	5104695FS	1	ROD
0130	5023212SM	1	NUT, 5/16-24 HEX, LH
0140	5025033FS	1	NUT
0150	5023323SM	1	CLEVIS, 5/16-24, STEE
0160	5025213X8SM	1	PIN, CLEVIS, 5/16" X
0170	5025211SM	1	PIN, HAIR, .0585" X 1

Not For Reproduction

Copyright © Briggs & Stratton. All Rights reserved

Note: Unless noted otherwise, use the standard torque specifications

Mfg. No: 5902012

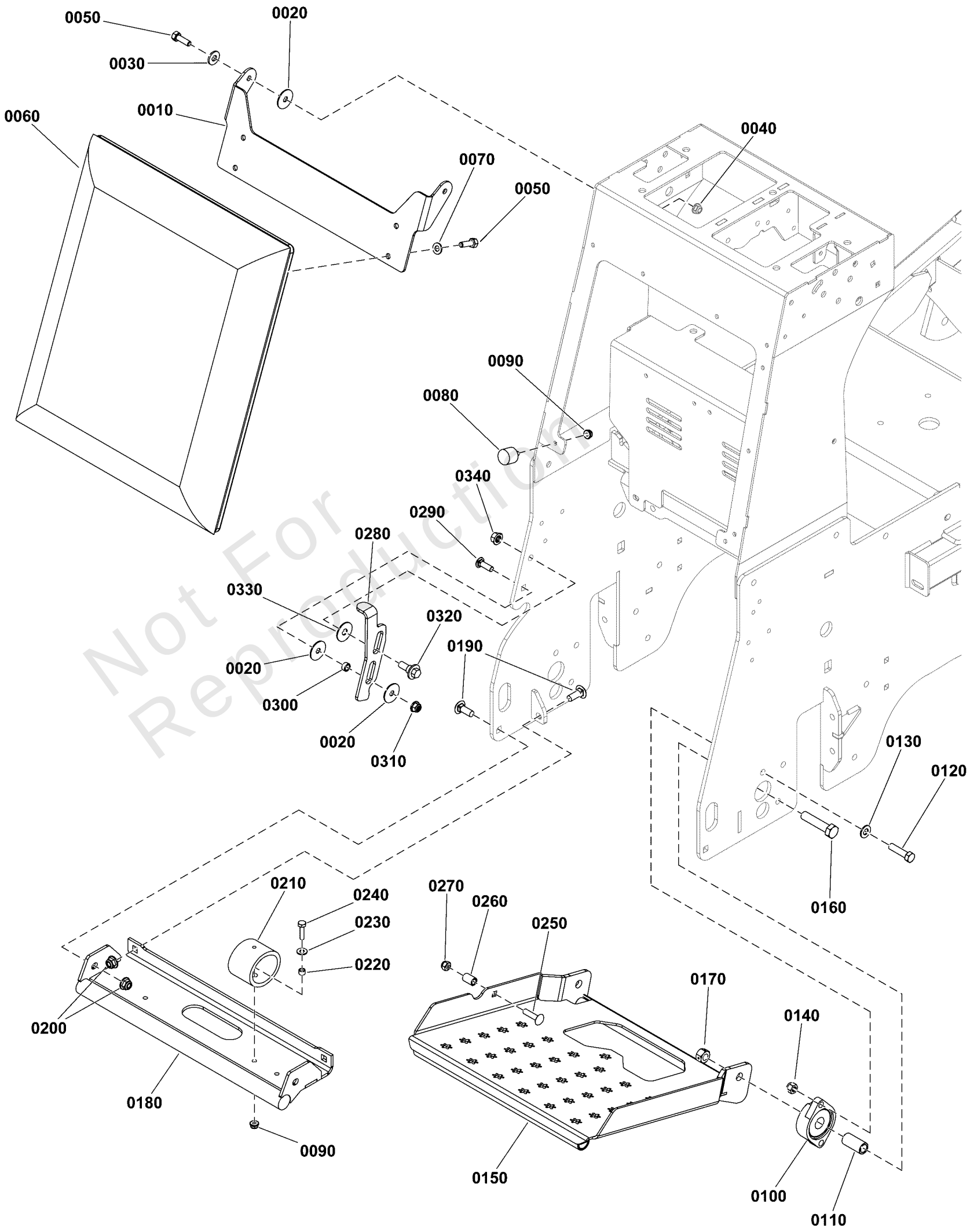

Not For Reproduction

Copyright © Briggs & Stratton. All Rights reserved

Operator Area Group

REF NO	PART NO	QTY	DESCRIPTION
0010	5415658A	1	PLATE, PAD MOUNT, SRSZ1 - BLK
0020	5025164SM	4	WASHER, 5/16" FENDER
0030	5025337FS	2	WASHER
0040	703115	2	NUT
0050	5025011X8FS	6	BOLT
0060	5109578FS	1	PAD, KNEE
0070	703350	4	WASHER
0080	5022673SM	2	BUMPER, RUBBER 1/4-20
0090	5025391FS	6	NUT
0100	5021499SM	2	BEARING, FLANGE
0110	5104658FS	2	SPACER
0120	5025013X12SM	4	BOLT, 3/8-16 X 1-1/2"
0130	5025156FS	4	WASHER
0140	5025096SM	4	NUT, 3/8-16 HEX NYLON
0150	5421234AFS	1	PLATFORM
0160	5025017X18SM	2	BOLT, 1/2-13
0170	5025332SM	2	NUT - SIDE LOCK
0180	5421242AFS	1	MOUNT
0190	703814	4	BOLT, RD HD, 3/8-16X1
0200	5025394SM	4	NUT, 3/8-16 HEX NYLOCK
0210	5105128FS	4	BUMPER
0220	5021878YP	4	SPACER, .25 X .37
0230	84007033	4	WASHER
0240	5025010X8SM	4	BOLT, 1/4-20 X 1", GD
0250	703446	1	BOLT, 5/16-18X1.25 G5
0260	5101352FS	1	SPACER
0270	5025057FS	1	NUT
0280	5421299AFS	1	PLATE
0290	5025145X8SM	1	BOLT, 5/16-18 X 1", C
0300	5102463YP	1	SPACER, .33 X .50X.25
0310	704067	1	NUT, HEX FLNG,5/16-18
0320	009X51MA	1	BOLT-SHD.38-16X.499D
0330	5025165SM	1	WASHER, 3/8" FENDER
0340	5025666FS	1	NUT

Not For Reproduction

Copyright © Briggs & Stratton. All Rights reserved

Parking Brake Group

Note: Unless noted otherwise, use the standard torque specifications

Mfg. No: 5902012

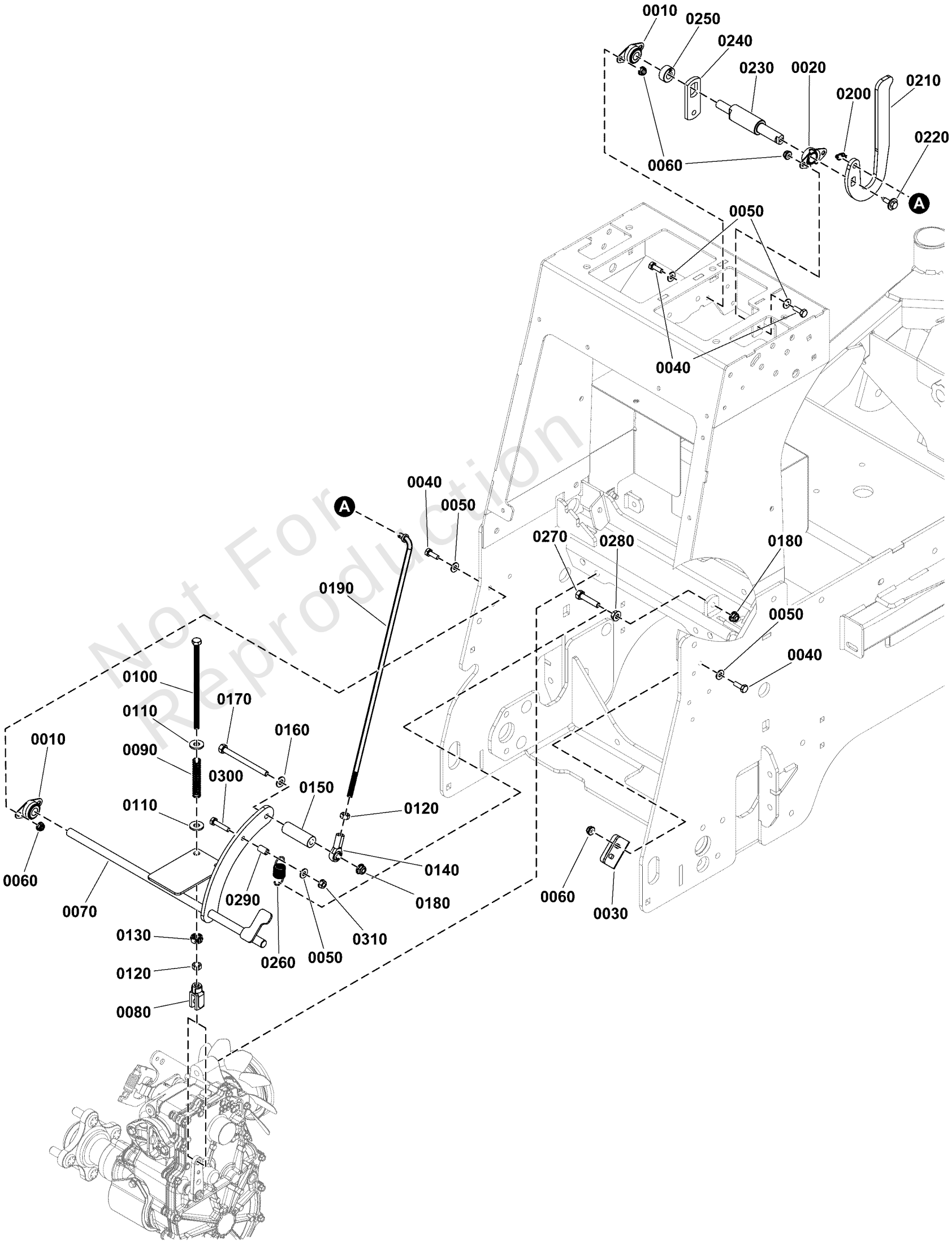

Not For Reproduction

Copyright © Briggs & Stratton. All Rights reserved

Parking Brake Group

REF NO	PART NO	QTY	DESCRIPTION
0010	5101123SM	3	BEARING, 1/2 FLANGE
0020	5104270YP	1	BEARING-FLANGE
0030	5415132AAFS	1	PLATE, SWITCH
0040	5025010X6SM	10	BOLT, 1/4-20 X 3/4" G
0050	84007033	11	WASHER
0060	5025391FS	10	NUT
0070	5420562AAFS	1	PIVOT
0080	5025688	2	CLEVIS, 5/16-24, STEEL,W/PIN, CZ
0090	5020637YP	2	SPRING-COMP, .375IDX2
0100	5025012X52	2	BOLT, 5/16-24 X 6.50, GD8, CZ
0110	5025337FS	4	WASHER
0120	5025033FS	3	NUT
0130	5102997FS	2	COLLAR
0140	5104493YP	1	BALL JOINT 5/16-24 RH
0150	5109600FS	1	SPACER
0160	703350	1	WASHER
0170	5025011X30SM	1	BOLT, 5/16-18 X 3-3/4 GD5
0180	703115	2	NUT
0190	5109524FS	1	ROD, BRAKE
0200	5025639FS	1	PIN, RETAINER
0210	5421092AAFS	1	PLATE
0220	2860664SM	1	SCREW, HEX SEMS WSHR,
0230	5104953FS	1	SHAFT, BRAKE
0240	5106314FS	1	PLATE
0250	5010580FS	1	COLLAR
0260	5010213YP	1	SPRING-EXT, .740 ODX2
0270	5025055X12SM	1	BOLT, 5/16-18 X 1-1/2
0280	5025127SM	1	NUT, 5/16-18 HEX SERR
0290	5041483YP	1	SPACER
0300	5025010X10SM	1	BOLT, 1/4-20 X 1-1/4"
0310	15X143MA	1	NUT,25-20 HEX FLG CTR

Not For Reproduction

Copyright © Briggs & Stratton. All Rights reserved

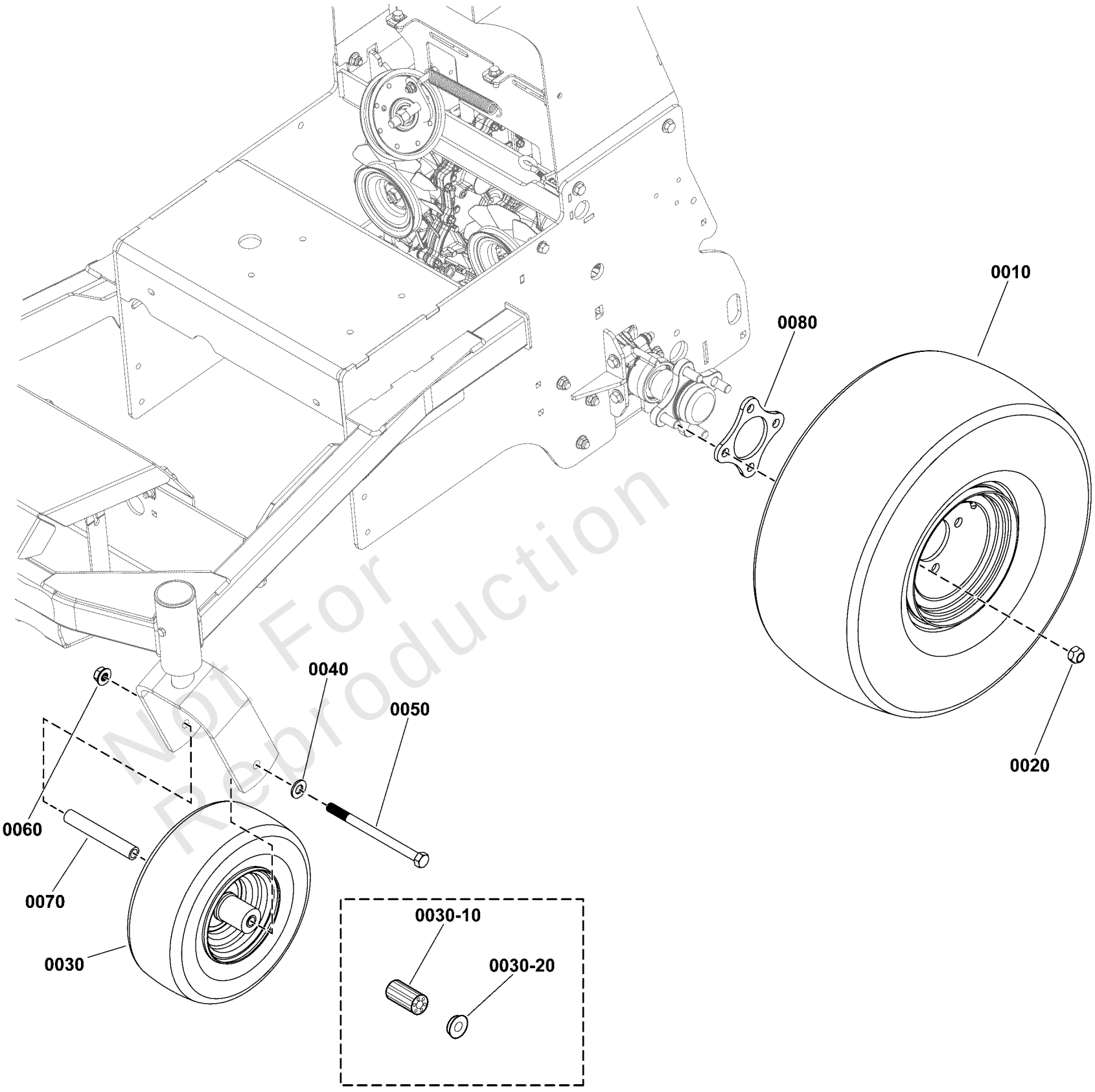

Not For Reproduction

Wheel and Tire Group

REF NO	PART NO	QTY	DESCRIPTION
0010	5109839FS	2	TIRE
0020	5020601SM	8	NUT, 1/2-20, FOR WHEEL BOLT SILVER
0030	5109032FS	2	TIRE ASSEMBLY
0030-10	5101418X1	4	BEARING, CASTER WHEEL, 11 X 4.0 - 5 BEAD LOCK (SV) -(2 per tire)
0030-20	5021043	4	RETAINER, BEARING (TWO PER TIRE)(SV) -(2 per tire)
0040	5025158SM	2	WASHER, 1/2" SAE
0050	5025017X56YP	2	BOLT, 1/2-13 X 7 GD5
0060	770225	2	NUT
0070	5045996SM	2	CASTER AXLE DDSH
0080	5403335AAFS	2	PLATE, SPACER

Not For Reproduction

Copyright © Briggs & Stratton. All Rights reserved

Hardware Identification & Torque Specifications

Torque Specification Chart

FOR STANDARD METRIC MACHINE HARDWARE (Tolerance ± 20%)

Property Class	5.6 Class 5.6		8.8 Class 8.8		10.9 Class 10.9		12.9 Class 12.9	
Size Of Hardware	*in/lbs* **ft/lbs**	Nm.	*in/lbs* **ft/lbs**	Nm.	*in/lbs* **ft/lbs**	Nm.	*in/lbs* **ft/lbs**	Nm.
M3	*5.88*	*.56*	*13.44*	*1.28*	*19.2*	*1.80*	*22.92*	2.15
M4	*13.44*	*1.28*	*30.72*	*2.90*	*43.44*	*4.10*	*52.56*	4.95
M5	*26.4*	*2.50*	*60.96*	*5.75*	**5.97**	*8.10*	**7.15**	9.7
M6	*44.64*	*4.3*	**7.3**	*9.9*	**10.3**	*14*	**12.1**	16.5
M7	**5.2**	*7.1*	**12.1**	*16.5*	**16.9**	*23*	**19.9**	27
M8	**7.7**	*10.5*	**17.7**	*24*	**25**	*34*	**29**	40
M10	**15**	*21*	**35**	*48*	**50**	*67*	**59**	81
M12	**26**	*36*	**61**	*83*	**86.2**	*117*	**103**	140
M14	**42**	*58*	**101**	*132*	**136**	*185*	**162**	220
M16	**64**	*88*	**147**	*200*	**210**	*285*	**250**	340
M18	**89**	*121*	**202**	*275*	**287**	*390*	**346**	470
M20	**126**	*171*	**290**	*390*	**405**	*550*	**486**	660
M22	**169**	*230*	**390**	*530*	**559**	*745*	**656**	890
M24	**217**	*295*	**497**	*375*	**708**	*960*	**840**	1140
M27	**320**	*435*	**733**	*995*	**1032**	*1400*	**1239**	1680
M30	**435**	*590*	**995**	*1350*	**1401**	*1900*	**1681**	2280
M33	**590**	*800*	**1349**	*1830*	**1902**	*2580*	**2278**	3090
M36	**759**	*1030*	**1740**	*2360*	**2441**	*3310*	**2935**	3980
M39	**988**	*1340*	**2249**	*3050*	**3163**	*4290*	**3798**	5150

The guides and ruler furnished below are designed to help you select the appropriate hardware.

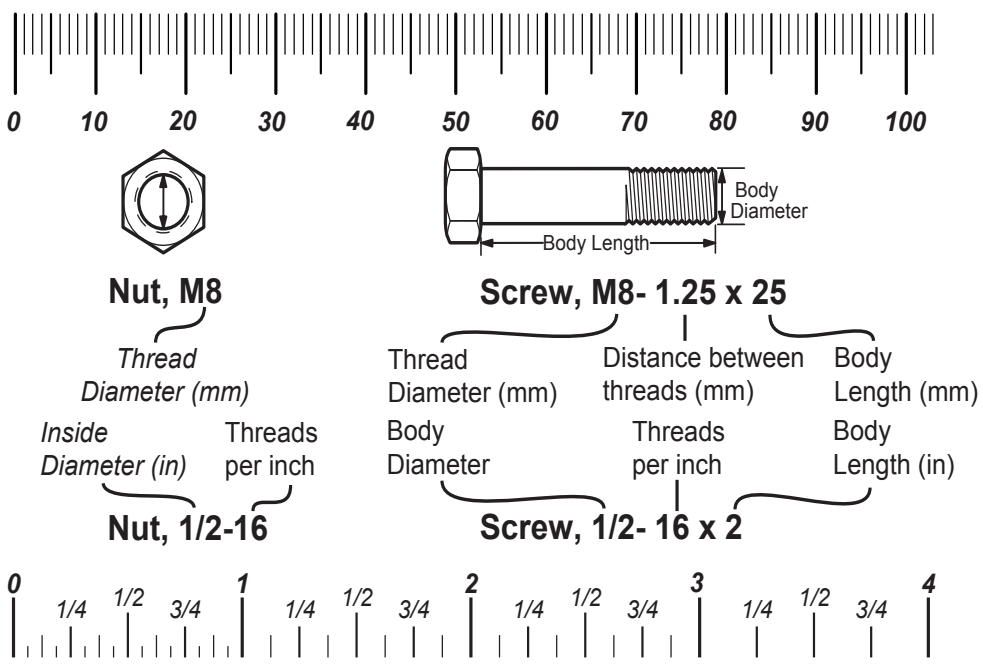

Standard Hardware Sizing

When a washer or nut is identified as **1/2"** (M8), this is the *Nominal size*, meaning the *inside diameter* is 1/2 inch (8mm metric thread diameter); if a second number is present it represents the *threads per inch* (distance between threads).

When bolt or capscrew is identified as **1/2 - 16 x 2"** (M8 - 1.25 x 50), this means the *Nominal size*, or body diameter is 1/2 inch (8mm metric thread diameter), the second number,16, represents the *threads per inch, (distance between threads).* The final number is the body length of the bolt or screw, 2 inches (50mm).

Torque Specification Chart

FOR STANDARD MACHINE HARDWARE (Tolerance ± 20%)

Hardware Grade	No Marks SAE Grade 2		SAE Grade 5		SAE Grade 8	
Size Of Hardware	*in/lbs* **ft/lbs**	Nm.	*in/lbs* **ft/lbs**	Nm.	*in/lbs* **ft/lbs**	Nm.
8-32	*19*	2.1	*30*	3.4	*41*	4.6
8-36	*20*	2.3	*31*	3.5	*43*	4.9
10-24	*27*	3.1	*43*	4.9	*60*	6.8
10-32	*31*	3.5	*49*	5.5	*68*	7.7
1/4-20	*66*	7.6	**8**	10.9	**12**	16.3
1/4-28	*76*	8.6	**10**	13.6	**14**	19.0
5/16-18	**11**	15.0	**17**	23.1	**25**	34.0
5/16-24	**12**	16.3	**19**	25.8	**29**	34.0
3/8-16	**20**	27.2	**30**	40.8	**45**	61.2
3/8-24	**23**	31.3	**35**	47.6	**50**	68.0
7/16-14	**30**	40.8	**50**	68.0	**70**	95.2
7/16-20	**35**	47.6	**55**	74.8	**80**	108.8
1/2-13	**50**	68.0	**75**	102.0	**110**	149.6
1/2-20	**55**	74.8	**90**	122.4	**120**	163.2
9/16-12	**65**	88.4	**110**	149.6	**150**	204.0
9/16-18	**75**	102.0	**120**	163.2	**170**	231.2
5/8-11	**90**	122.4	**150**	204.0	**220**	299.2
5/8-18	**100**	136	**180**	244.8	**240**	326.4
3/4-10	**160**	217.6	**260**	353.6	**386**	525.0
3/4-16	**180**	244.8	**300**	408.0	**420**	571.2
7/8-9	**140**	190.4	**400**	544.0	**600**	816.0
7/8-14	**155**	210.8	**440**	598.4	**660**	897.6
1-8	**220**	299.2	**580**	788.8	**900**	1,244.0
1-12	**240**	326.4	**640**	870.4	**1,000**	1,360.0

NOTES

1. These torque values are to be used for all hardware excluding: locknuts, self-tapping screws, thread forming screws, sheet metal screws and socket head setscrews.
2. Recommended seating torque values for locknuts:
   a. for prevailing torque locknuts - use 65% of grade 5 torques.
   b. for flange whizlock nuts and screws - use 135% of grade 5 torques.
3. Unless otherwise noted on assembly drawings, all torque values must meet this specification.

Common Hardware Types

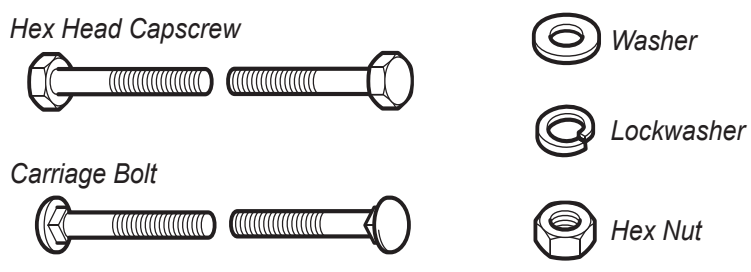

Wrench & Fastener Size Guide

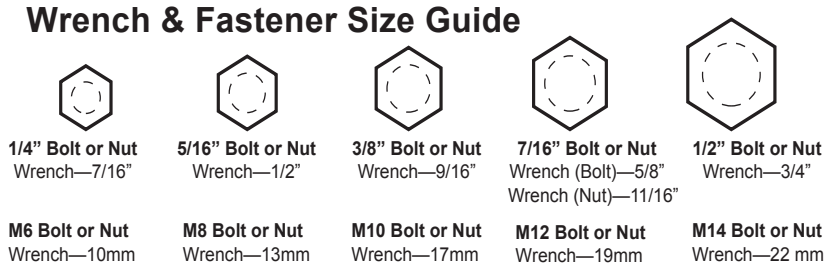

Copyright © Briggs & Stratton. All Rights reserved

20-May-2024