Parts Manual

Mfg. No: 1019-3
7,500 EXL

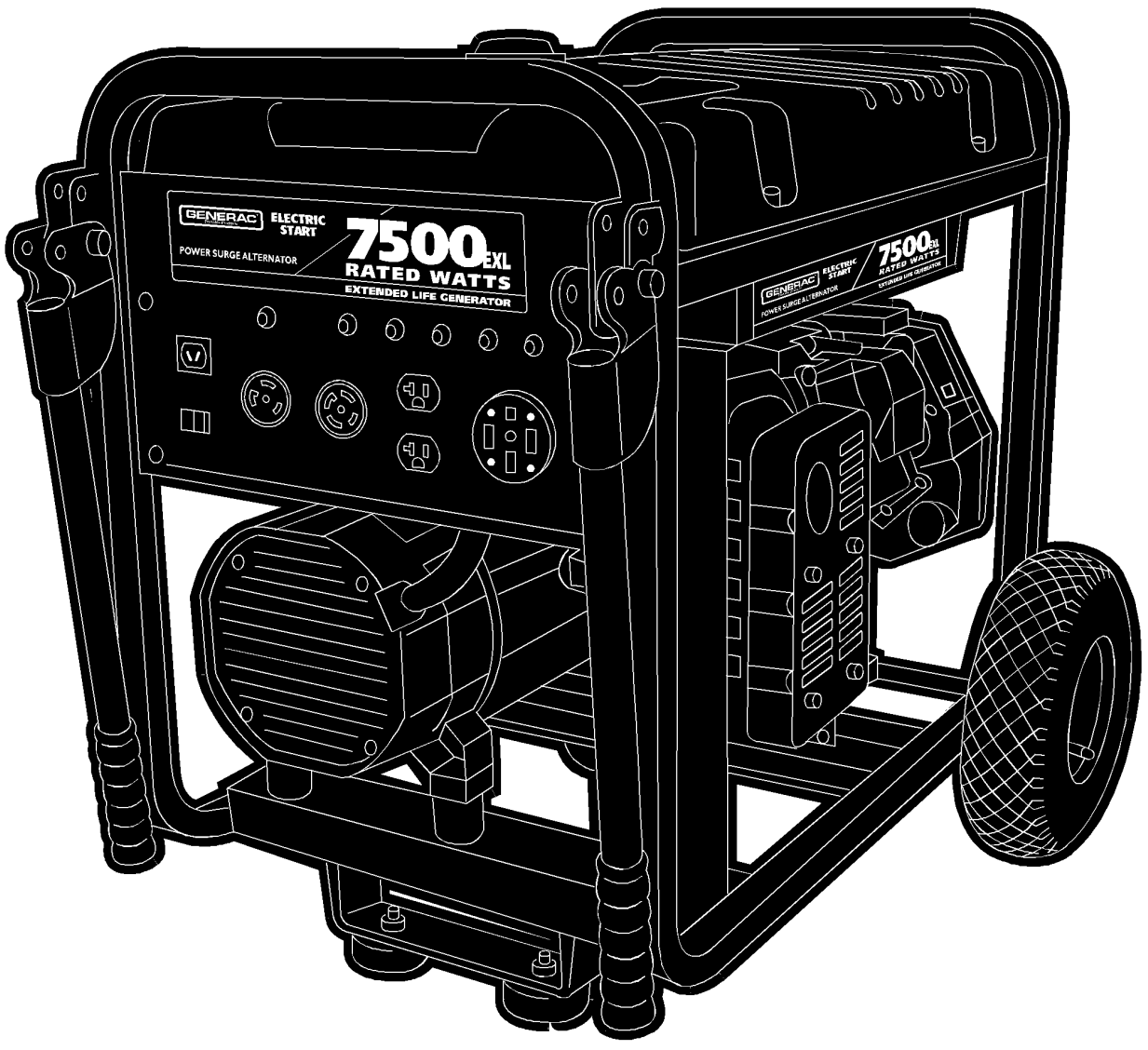

Copyright © Briggs & Stratton. All Rights reserved

Model Components

	Page
Alternator	4
Control Panel	8
Frame	10
Wheel Kit	14
Wiring Diagram	16
Wiring Schematic	18
Torque Specification Chart	20

Not For Reproduction

Copyright © Briggs & Stratton. All Rights reserved

Alternator

Note: Unless noted otherwise, use the standard torque specifications

Mfg. No: 1019-3

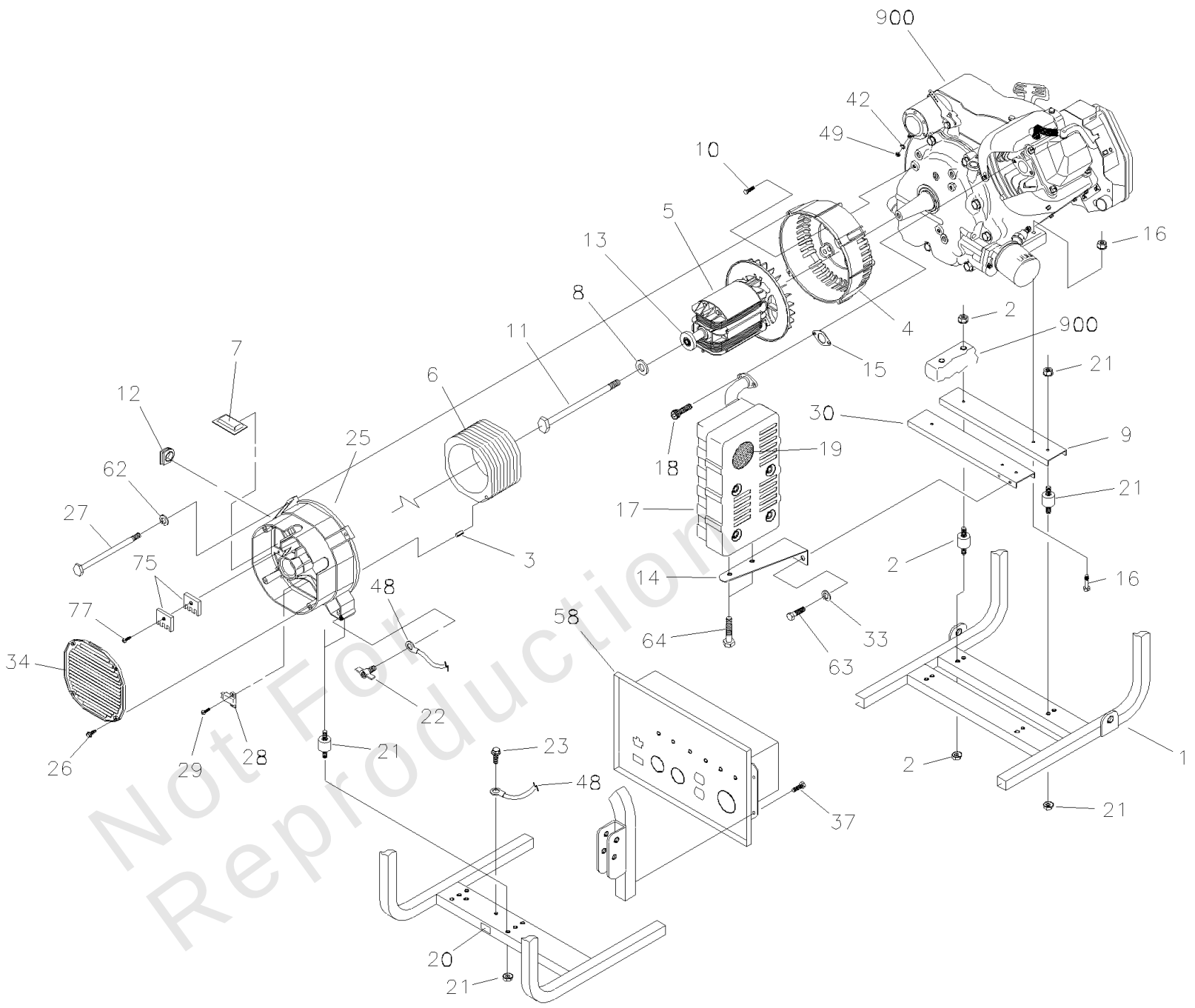

Not For Reproduction

Copyright © Briggs & Stratton. All Rights reserved

Alternator

REF NO	PART NO	QTY	DESCRIPTION
1	M197022GS		CRADLE, Red
2	194219GS		KIT, Mount,Vibration
3	81917GS		PIN, Roll 4mm x 10
4	92247GS		HOUSING, Engine Adapter
5	B1342GGS		ASSY, Rotor
6	B1897AGS		ASSY, Stator
7	84132GS		ASSY, Power Regulator
8	96796GS		WASHER, Special Flat - M8
9	M92531GS		SUPPORT, Engine
10	86307GS		HHMS, 5/16-24 x 3/4" Lg. SEMS
11	47481GS		HHCS, 5/16-24 x 10-5/8 Lg.
12	67022GS		GROMMET, Rubber
13	65791GS		BEARING
14	92532GS		BRACKET, Muffler
15	90239GS		GASKET, Muffler
16	195078GS		KIT, Engine Mounting Hardware
17	A7433GS		MUFFLER
18	-----		SCREW, M8 - 1.25 x 20 -(Purchase locally)
19	83083GS		SCREEN, Spark Arrestor
20	B4986GS		DECAL, Ground
21	194218GS		KIT, Mount,Vibration
22	86494GS		SCREW,Wing M6 - 1.0 x 16
23	86292GS		SCREW, 10 - 16 x 3/4, Self Drill
25	SRV66825DGS		CARRIER, Rear Bearing
26	74908GS		TAPTITE, M5-0.8 x 10 Lg.
27	66449LGS		BOLT
28	66386GS		ASSY, Brush Holder
29	66849GS		TAPTITE, M5-0.8 x 16 Lg.
30	M92731GS		SUPPORT, Engine & Muffler
33	-----		WASHER, 5/16 - M8 Lock -(Purchase locally)
34	B4871GS		COVER, Bearing Carrier
37	B2153GS		SCREW, 12-14 x 7/8, Self Driller
42	-----		WASHER, Shakeproof, Ext. #10 -(Purchase locally)
48	195373GS		WIRE, Ground
58	B4366GS		ASSY, Control Panel -(see "Frame")
62	-----		WASHER, 1/4 Lock -(Purchase locally)
63	-----		HHCS, 5/16 - 18 x 3/4 -(Purchase locally)
64	-----		HHCS, M6 - 1.0 x 12 -(Purchase locally)
75	65795GS		RECTIFIER, Battery Charge
77	66849CGS		TAPTITE, M5-0.8 x 30 Lg.
900	-----		ENGINE -Contact Engine Manufacturer
	BB3061GS		BOTTLE, Oil -Not Illustrated
	B4767GS		COVER, Unit -Not Illustrated
	491055S		PLUG, Spark

Not For Reproduction

Copyright © Briggs & Stratton. All Rights reserved

Alternator

Note: Unless noted otherwise, use the standard torque specifications

Mfg. No: 1019-3

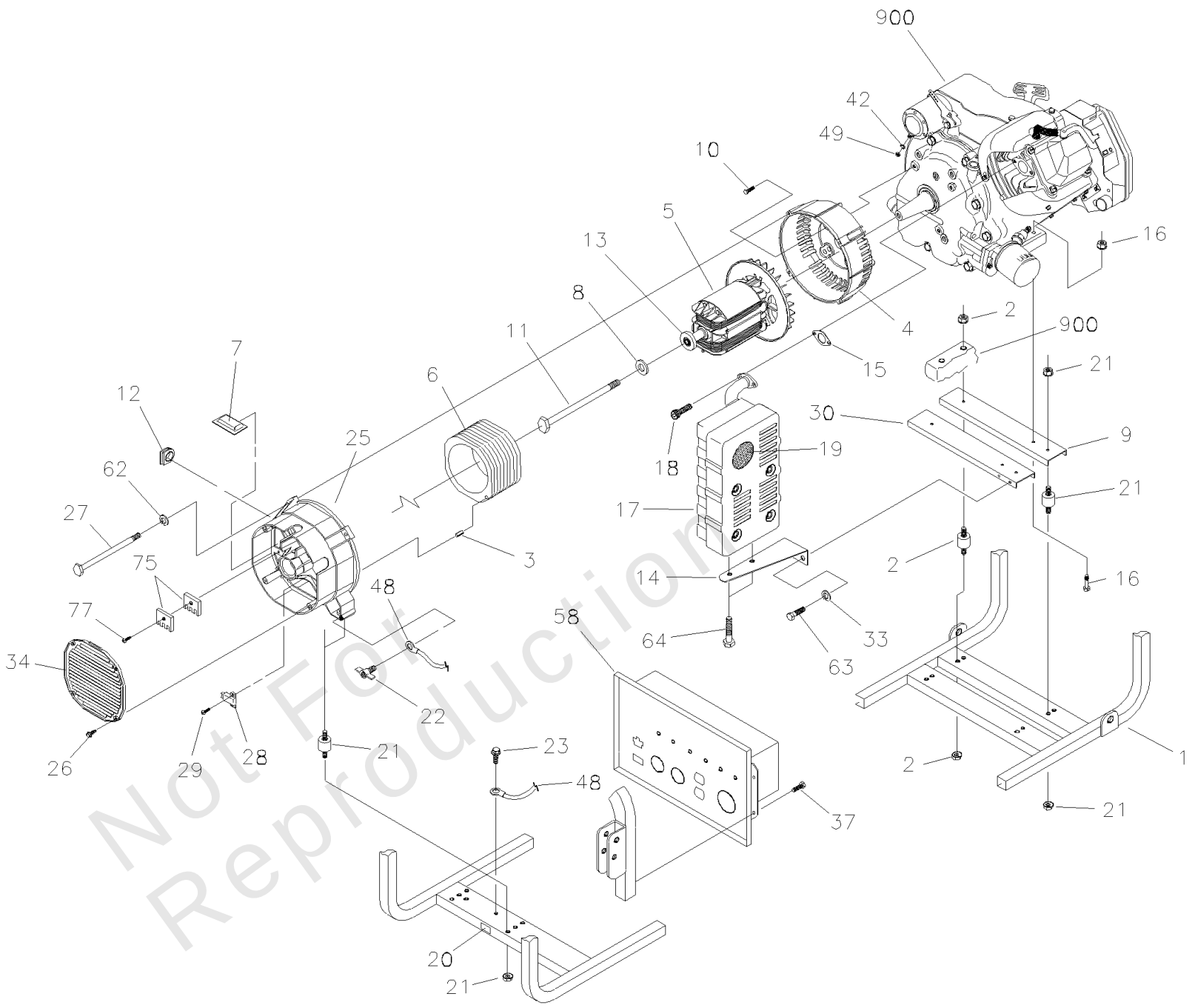

Not For Reproduction

Copyright © Briggs & Stratton. All Rights reserved

Alternator

REF NO	PART NO	QTY	DESCRIPTION
	189713GS		MANUAL, Operator's -Not Illustrated
	73111GS		FILTER,Air -Not Illustrated
	84882GS		WRENCH, Spark Plug -Not Illustrated
	43438GS		PLUG, 120/240V, 30A -Not Illustrated
	70185GS		FILTER, Oil -Not Illustrated
	188971GS		CORD, Extension -Not Illustrated
	A8927GS		MANUAL, Engine -Not Illustrated
	B4177GS		CHARGER, Battery Float -Not Illustrated
	199384GS		DECAL, Family, CA EVP -Not Illustrated
	65787GS		CABLE, Battery Charge -Not Illustrated
	100523GS		PLUG, 120V/30A -Not Illustrated
	194033GS		KIT, Decals Service -Not Illustrated
	84883GS		Cord Wrap -Optional Accessories Not Included
	100031		STABILIZER, Fuel -Optional Accessories Not Included

Not For Reproduction

Copyright © Briggs & Stratton. All Rights reserved

Control Panel

Note: Unless noted otherwise, use the standard torque specifications

Mfg. No: 1019-3

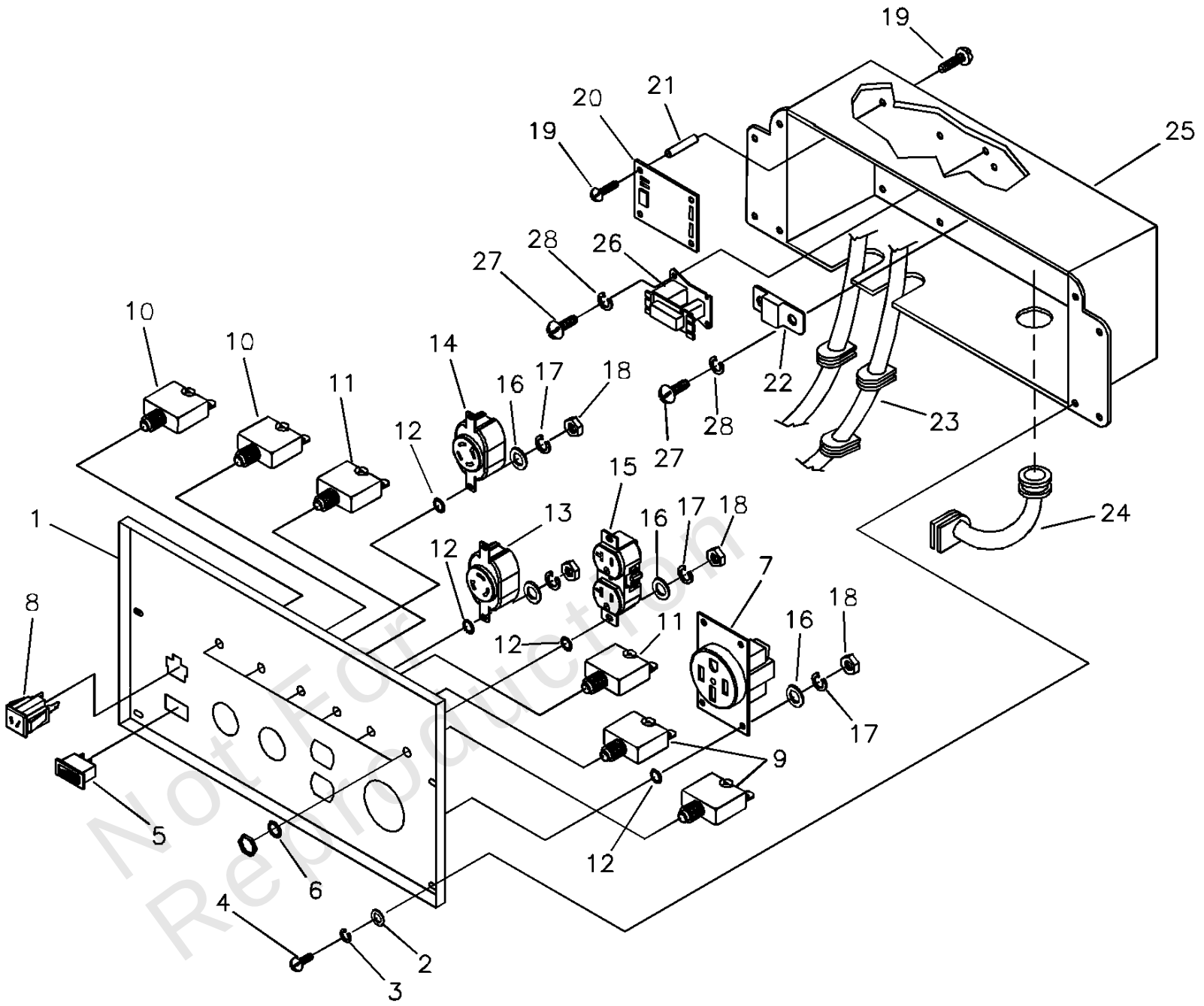

Not For Reproduction

Copyright © Briggs & Stratton. All Rights reserved

Control Panel

REF NO	PART NO	QTY	DESCRIPTION
1	BB4461GS		PANEL, Control
2	-----		WASHER, #10 M5 Flat -(Purchase locally)
3	-----		WASHER, Lock, M5 -(Purchase locally)
4	-----		SCREW, M5-0.8 x 12 mm Philips Hd -(Purchase locally)
5	82538GS		SWITCH, Idle Control
6	-----		WASHER, 7/16" Internal Lock -(Purchase locally)
7	B4262GS		OUTLET, 50A, 240V
8	90418GS		OUTLET, 10A, 12VDC
9	75207NGS		BREAKER, Circuit, 35A
10	75207AGS		BREAKER, Circuit, 30A
11	75207GS		BREAKER, Circuit, 20A
12	-----		WASHER, #8 Shakeproof -(Purchase locally)
13	68868GS		OUTLET, 30A, 120V Locking
14	43437GS		OUTLET, 30A, 120V/240V Locking
15	68759GS		OUTLET, 20A, 120V
16	-----		WASHER, M4 Flat -(Purchase locally)
17	-----		WASHER, Lock, #8 M4 -(Purchase locally)
18	-----		NUT, M4 - 0.7 Hex -(Purchase locally)
19	-----		SCREW, #6-32 x 3/8" Self Tapping -(Purchase locally)
20	83970GS		BOARD, System Control
21	64525GS		STANDOFF, 3/4" Hex
22	87962GS		BREAKER, Circuit, 10A (auto), 12V
23	84335GS		ASSY,Wire Harness
24	84134GS		GROMMET
25	B92069GS		BOX, Control Panel
26	84028GS		TRANSFORMER, Idle Control
27	-----		SCREW, M3 - 0.5 x 10 mm -(Purchase locally)
28	-----		WASHER, Lock, M3 -(Purchase locally)

Not For Reproduction

Copyright © Briggs & Stratton. All Rights reserved

Frame

Note: Unless noted otherwise, use the standard torque specifications

Mfg. No: 1019-3

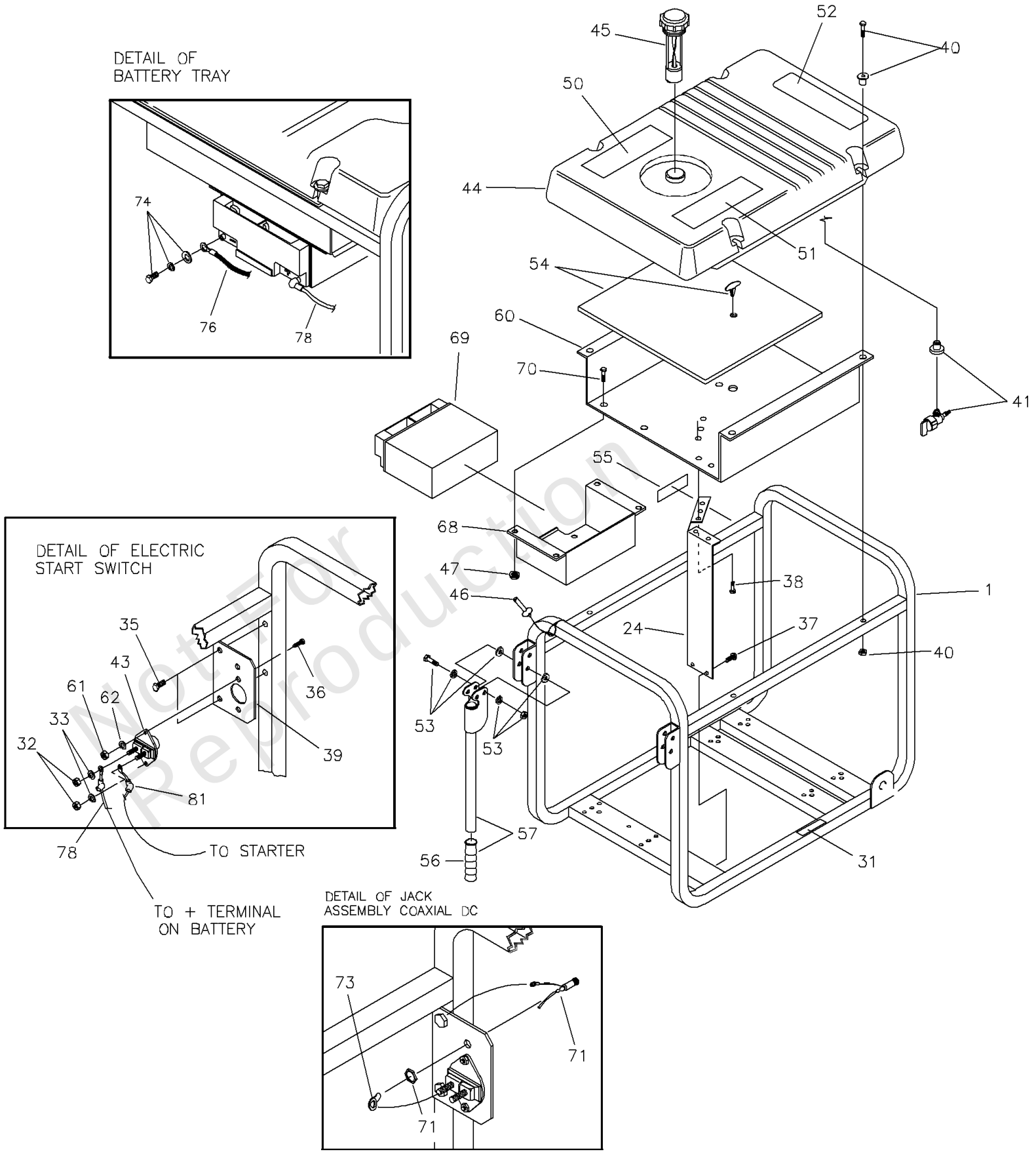

Not For Reproduction

Copyright © Briggs & Stratton. All Rights reserved

Frame

REF NO	PART NO	QTY	DESCRIPTION
1	M197022GS		CRADLE, Red
24	194390GS		SHIELD, Heat
31	196830GS		DECAL, Hot Muffler
32	-----		NUT, 5/16 - 24 -(Purchase locally)
33	-----		WASHER, 5/16 - M8 Lock -(Purchase locally)
35	195094GS		SCREW, 10 - 16 x .68 Self Drill
36	-----		HHCS, 1/4 - 20 x 3/4 -(Purchase locally)
37	B2153GS		SCREW, 12-14 x 7/8, Self Driller
38	56893GS		CRIMPTITE, 10-24 x 1/2"
39	188987GS		BRACKET, Switch
40	194401GS		KIT, Hardware Tank Fuel -(Includes Qty. 4)
41	192980GS		KIT,Valve Tank
43	77282GS		SWITCH, Starter
44	193823GS		ASSY,Tank, Fuel -(Includes Items 41, 50, 51, & 52)
45	B4363GS		CAP, with Gauge, Fuel
46	B4135GS		PIN, with Lanyard
50	188333GS		DECAL, Instruction Fuel
51	194799GS		DECAL, Danger
52	93826GS		DECAL, Start Instructions
53	194034GS		KIT, Fold Down Handle Hardware
54	194448GS		KIT, Insulation with Clip
55	197798GS		DECAL, Fuel Shut-Off
56	198669GS		GRIP
57	B193200GS		ASSY, Handle -(Includes Item 56)
60	194389GS		SHIELD, Heat.Tank
61	-----		NUT, 1/4 - 20 -(Purchase locally)
62	-----		WASHER, 1/4 Lock -(Purchase locally)
68	192985GS		TRAY, Battery
69	193043GS		BATTERY
70	-----		HCS, M6 - 1.0 x 12 -(Purchase locally)
71	192531GS		ASSY, Jack, DC
73	58359GS		LUG, 5/16 #22/18 I-S
74	193347GS		KIT, Battery Hardware
76	185939HGS		ASSY,Wire, #55
78	189302CGS		ASSY,Wire, #13
81	189302BGS		ASSY,Wire, #16
	B4767GS		COVER, Unit -Not Illustrated
	491055S		PLUG, Spark
	189713GS		MANUAL, Operator's -Not Illustrated
	73111GS		FILTER,Air -Not Illustrated
	84882GS		WRENCH, Spark Plug -Not Illustrated
	43438GS		PLUG, 120/240V, 30A -Not Illustrated

Not For Reproduction

Copyright © Briggs & Stratton. All Rights reserved

Frame

Note: Unless noted otherwise, use the standard torque specifications

Mfg. No: 1019-3

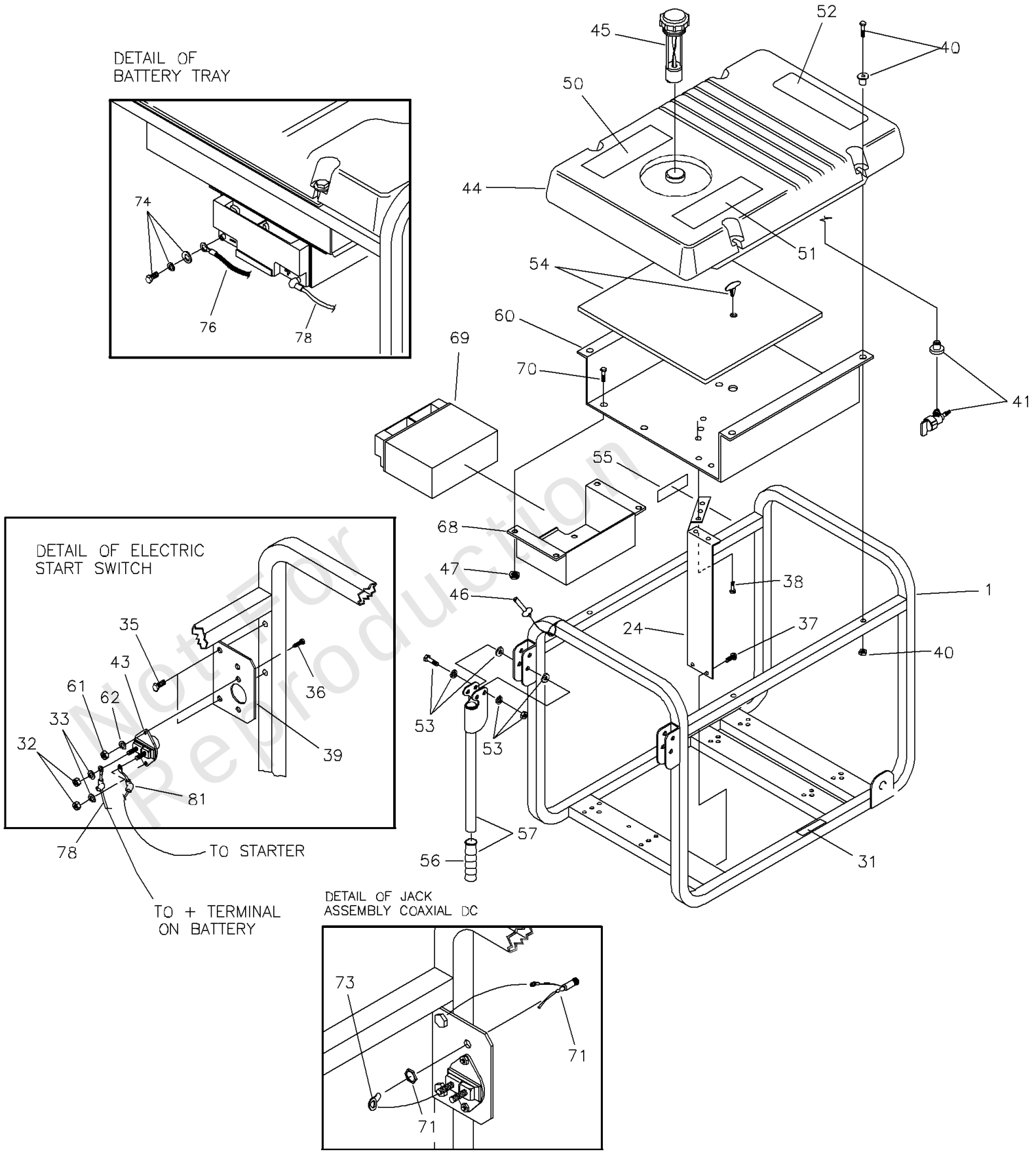

Not For Reproduction

Copyright © Briggs & Stratton. All Rights reserved

Frame

REF NO	PART NO	QTY	DESCRIPTION
	70185GS		FILTER, Oil -Not Illustrated
	188971GS		CORD, Extension -Not Illustrated
	A8927GS		MANUAL, Engine -Not Illustrated
	B4177GS		CHARGER, Battery Float -Not Illustrated
	199384GS		DECAL, Family, CA EVP -Not Illustrated
	65787GS		CABLE, Battery Charge -Not Illustrated
	100523GS		PLUG, 120V/30A -Not Illustrated
	194033GS		KIT, Decals Service -Not Illustrated
	84883GS		Cord Wrap -Optional Accessories Not Included
	100031		STABILIZER, Fuel -Optional Accessories Not Included

Not For Reproduction

Copyright © Briggs & Stratton. All Rights reserved

Wheel Kit

Note: Unless noted otherwise, use the standard torque specifications

Mfg. No: 1019-3

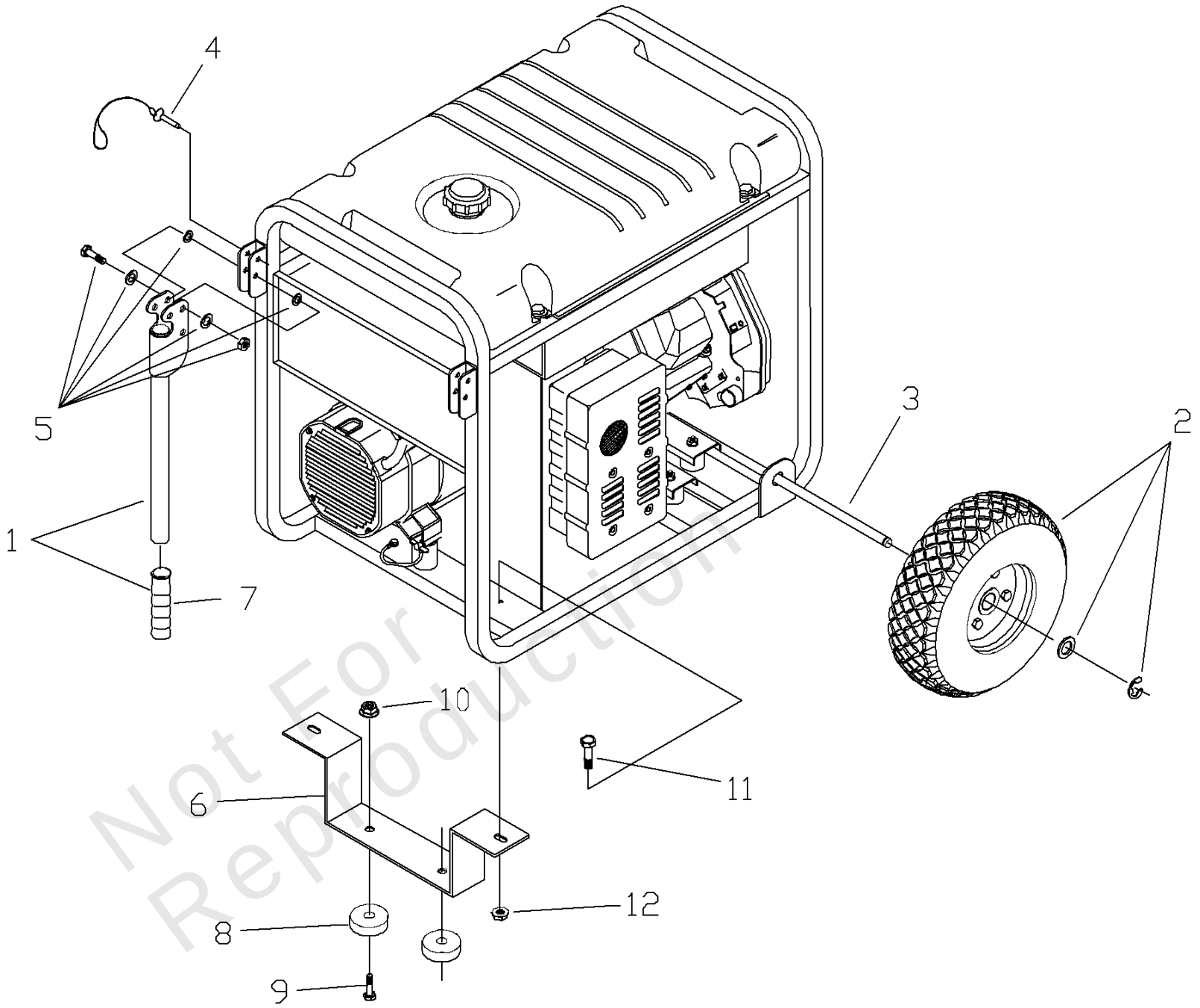

Not For Reproduction

Copyright © Briggs & Stratton. All Rights reserved

Wheel Kit

REF NO	PART NO	QTY	DESCRIPTION
1	B193200GS		ASSY, Handle -(Includes Item 7)
2	194509GS		KIT,Wheel
3	191267GGS		AXLE, 5/8" x 23.62"
4	B4135GS		PIN, with Lanyard
5	194034GS		KIT, Hardware Fold Down Handle
6	B186927GS		SUPPORT LEG
7	189718GS		GRIP
8	191413GS		VIBE MOUNT
9	-----		HHCS, 1/4 - 20 x 1 -(Purchase locally)
10	-----		NUT, 1/4 - 20 Serrated Lock -(Purchase locally)
11	-----		HHCS, M8 - 1.25 x 20 -(Purchase locally)
12	-----		NUT, M8 Lock -(Purchase locally)

Not For Reproduction

Copyright © Briggs & Stratton. All Rights reserved

Wiring Diagram

Note: Unless noted otherwise, use the standard torque specifications

Mfg. No: 1019-3

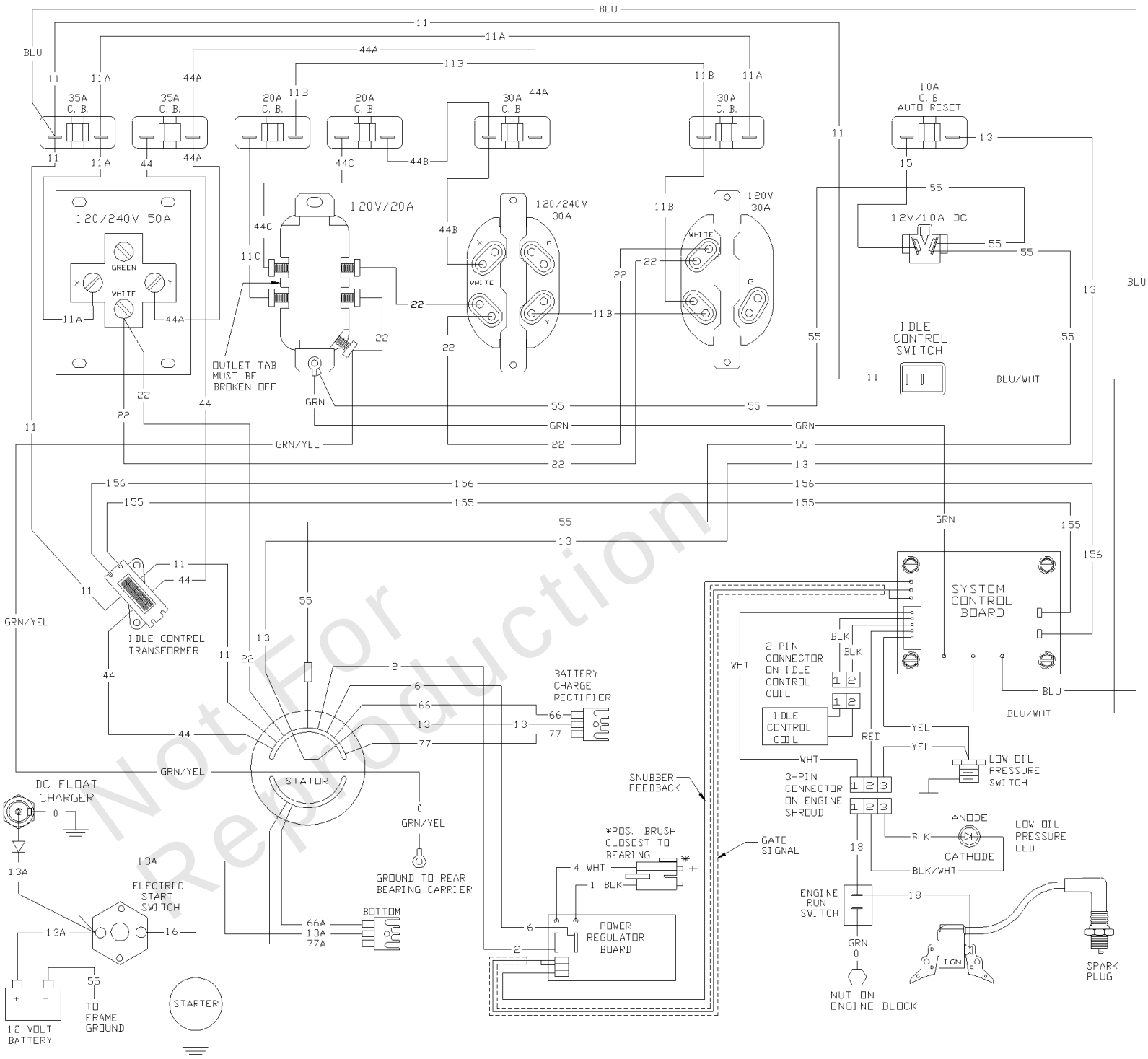

Not For Reproduction

Wiring Diagram

REF NO	PART NO	QTY	DESCRIPTION
--	-----		Wiring Diagram Only
--	-----		WARNING - Generator Voltage Could Cause Electrical Shock or Burn Resulting in Death Or Serious Injury. To Avoid Electrical Shock Or Burn Hazard, Please Refer Service To Qualified Personnel.

Not For Reproduction

Copyright © Briggs & Stratton. All Rights reserved

Wiring Schematic

Note: Unless noted otherwise, use the standard torque specifications

Mfg. No: 1019-3

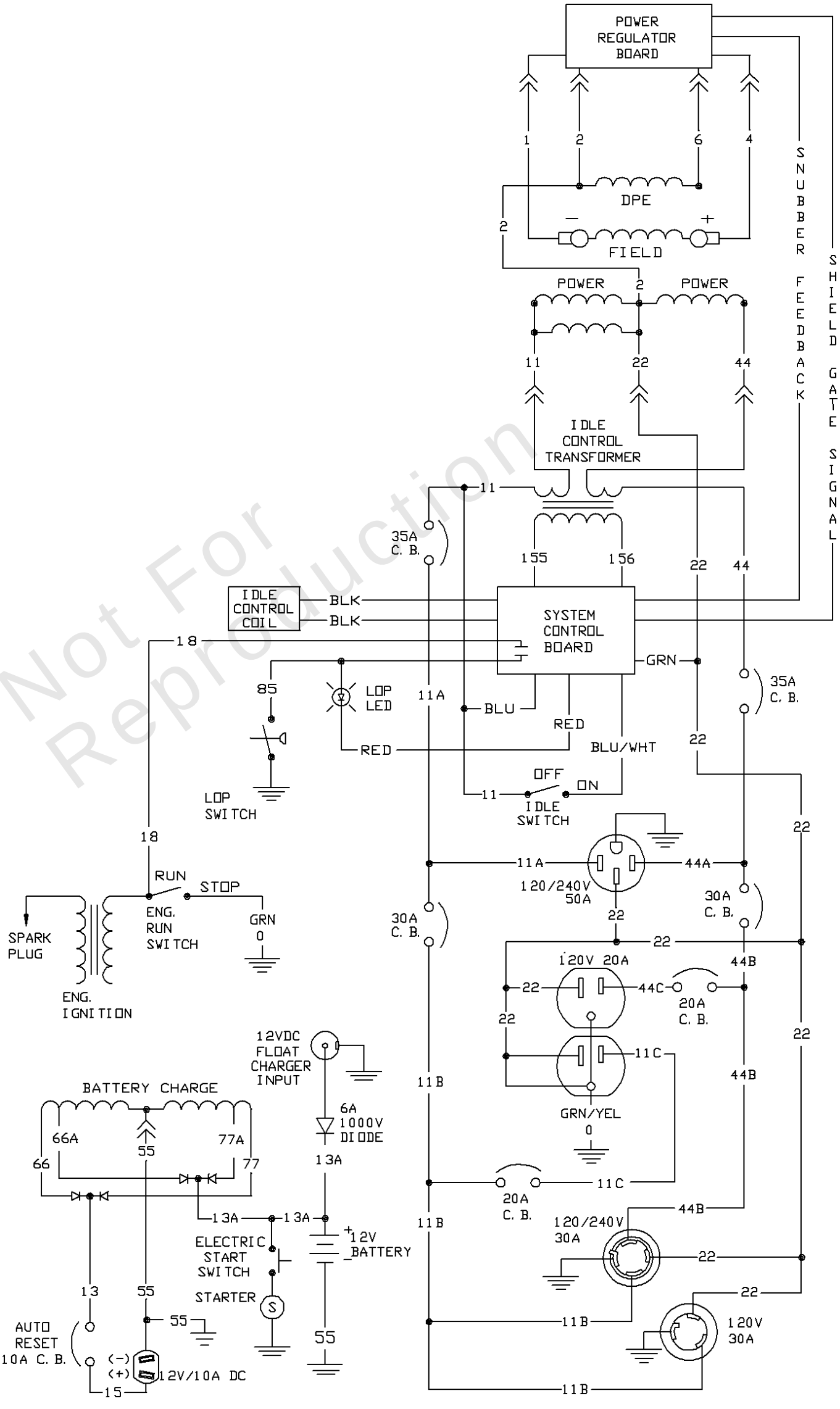

Not For Reproduction

Copyright © Briggs & Stratton. All Rights reserved

Wiring Schematic

REF NO	PART NO	QTY	DESCRIPTION
--	-----		Wiring Schematic Only
--	-----		WARNING - Generator Voltage Could Cause Electrical Shock or Burn Resulting in Death Or Serious Injury. To Avoid Electrical Shock Or Burn Hazard, Please Refer Service To Qualified Personnel.

Not For Reproduction

Copyright © Briggs & Stratton. All Rights reserved

Hardware Identification & Torque Specifications

Torque Specification Chart

FOR STANDARD METRIC MACHINE HARDWARE (Tolerance ± 20%)

Property Class	5.6 Class 5.6		8.8 Class 8.8		10.9 Class 10.9		12.9 Class 12.9	
Size Of Hardware	*in/lbs* **ft/lbs**	Nm.	*in/lbs* **ft/lbs**	Nm.	*in/lbs* **ft/lbs**	Nm.	*in/lbs* **ft/lbs**	Nm.
M3	*5.88*	*.56*	*13.44*	*1.28*	*19.2*	*1.80*	*22.92*	2.15
M4	*13.44*	*1.28*	*30.72*	*2.90*	*43.44*	*4.10*	*52.56*	4.95
M5	*26.4*	*2.50*	*60.96*	*5.75*	**5.97**	*8.10*	**7.15**	9.7
M6	*44.64*	*4.3*	**7.3**	*9.9*	**10.3**	*14*	**12.1**	16.5
M7	**5.2**	*7.1*	**12.1**	*16.5*	**16.9**	*23*	**19.9**	27
M8	**7.7**	*10.5*	**17.7**	*24*	**25**	*34*	**29**	40
M10	**15**	*21*	**35**	*48*	**50**	*67*	**59**	81
M12	**26**	*36*	**61**	*83*	**86.2**	*117*	**103**	140
M14	**42**	*58*	**101**	*132*	**136**	*185*	**162**	220
M16	**64**	*88*	**147**	*200*	**210**	*285*	**250**	340
M18	**89**	*121*	**202**	*275*	**287**	*390*	**346**	470
M20	**126**	*171*	**290**	*390*	**405**	*550*	**486**	660
M22	**169**	*230*	**390**	*530*	**559**	*745*	**656**	890
M24	**217**	*295*	**497**	*375*	**708**	*960*	**840**	1140
M27	**320**	*435*	**733**	*995*	**1032**	*1400*	**1239**	1680
M30	**435**	*590*	**995**	*1350*	**1401**	*1900*	**1681**	2280
M33	**590**	*800*	**1349**	*1830*	**1902**	*2580*	**2278**	3090
M36	**759**	*1030*	**1740**	*2360*	**2441**	*3310*	**2935**	3980
M39	**988**	*1340*	**2249**	*3050*	**3163**	*4290*	**3798**	5150

The guides and ruler furnished below are designed to help you select the appropriate hardware.

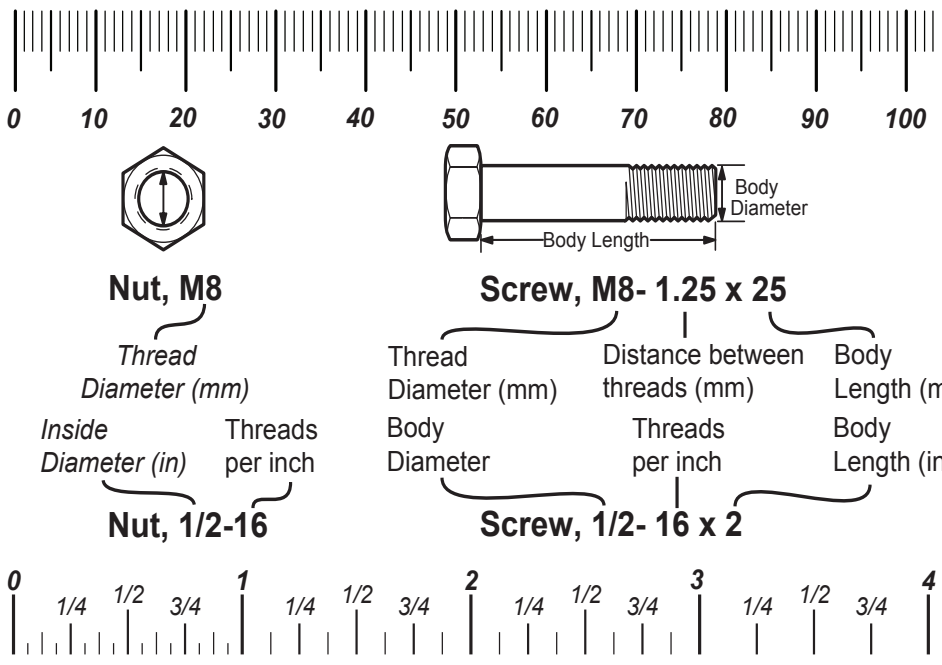

Standard Hardware Sizing

When a washer or nut is identified as **1/2"** (M8), this is the *Nominal size*, meaning the *inside diameter* is 1/2 inch (8mm metric thread diameter); if a second number is present it represents the *threads per inch* (distance between threads).

When bolt or capscrew is identified as **1/2 - 16 x 2"** (M8 - 1.25 x 50), this means the *Nominal size*, or body diameter is 1/2 inch (8mm metric thread diameter), the second number,16, represents the *threads per inch, (distance between threads).* The final number is the body length of the bolt or screw, 2 inches (50mm).

Torque Specification Chart

FOR STANDARD MACHINE HARDWARE (Tolerance ± 20%)

Hardware Grade	No Marks SAE Grade 2		SAE Grade 5		SAE Grade 8	
Size Of Hardware	*in/lbs* **ft/lbs**	Nm.	*in/lbs* **ft/lbs**	Nm.	*in/lbs* **ft/lbs**	Nm.
8-32	*19*	2.1	*30*	3.4	*41*	4.6
8-36	*20*	2.3	*31*	3.5	*43*	4.9
10-24	*27*	3.1	*43*	4.9	*60*	6.8
10-32	*31*	3.5	*49*	5.5	*68*	7.7
1/4-20	*66*	7.6	**8**	10.9	**12**	16.3
1/4-28	*76*	8.6	**10**	13.6	**14**	19.0
5/16-18	**11**	15.0	**17**	23.1	**25**	34.0
5/16-24	**12**	16.3	**19**	25.8	**29**	34.0
3/8-16	**20**	27.2	**30**	40.8	**45**	61.2
3/8-24	**23**	31.3	**35**	47.6	**50**	68.0
7/16-14	**30**	40.8	**50**	68.0	**70**	95.2
7/16-20	**35**	47.6	**55**	74.8	**80**	108.8
1/2-13	**50**	68.0	**75**	102.0	**110**	149.6
1/2-20	**55**	74.8	**90**	122.4	**120**	163.2
9/16-12	**65**	88.4	**110**	149.6	**150**	204.0
9/16-18	**75**	102.0	**120**	163.2	**170**	231.2
5/8-11	**90**	122.4	**150**	204.0	**220**	299.2
5/8-18	**100**	136	**180**	244.8	**240**	326.4
3/4-10	**160**	217.6	**260**	353.6	**386**	525.0
3/4-16	**180**	244.8	**300**	408.0	**420**	571.2
7/8-9	**140**	190.4	**400**	544.0	**600**	816.0
7/8-14	**155**	210.8	**440**	598.4	**660**	897.6
1-8	**220**	299.2	**580**	788.8	**900**	1,244.0
1-12	**240**	326.4	**640**	870.4	**1,000**	1,360.0

NOTES

1. These torque values are to be used for all hardware excluding: locknuts, self-tapping screws, thread forming screws, sheet metal screws and socket head setscrews.
2. Recommended seating torque values for locknuts:
   a. for prevailing torque locknuts - use 65% of grade 5 torques.
   b. for flange whizlock nuts and screws - use 135% of grade 5 torques.
3. Unless otherwise noted on assembly drawings, all torque values must meet this specification.

Common Hardware Types

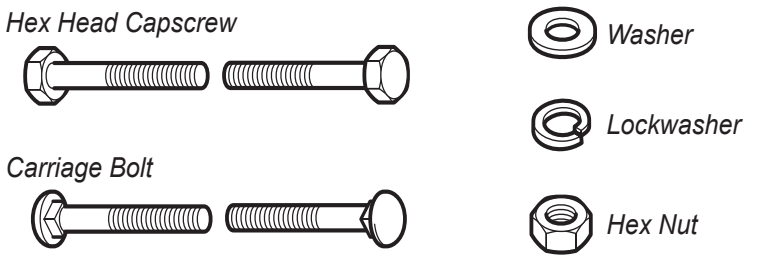

Wrench & Fastener Size Guide

1/4" Bolt or Nut Wrench—7/16"

5/16" Bolt or Nut Wrench—1/2"

3/8" Bolt or Nut Wrench—9/16"

7/16" Bolt or Nut Wrench (Bolt)—5/8" Wrench (Nut)—11/16"

1/2" Bolt or Nut Wrench—3/4"

M6 Bolt or Nut Wrench—10mm

M8 Bolt or Nut Wrench—13mm

M10 Bolt or Nut Wrench—17mm

M12 Bolt or Nut Wrench—19mm

M14 Bolt or Nut Wrench—22 mm

Copyright © Briggs & Stratton. All Rights reserved