Parts Manual

Mfg. No: 5901675

SRS Z1 Series w/ 48" Mower Deck
(SRSZ1BV2348)

Copyright © Briggs & Stratton. All Rights reserved

5600582 - Mulch Kit for ZTR & WALK w/ 48" Deck - S/N: 2015355958 & Above. . . . . .

Not For Reproduction

Copyright © Briggs & Stratton. All Rights reserved

Model Components

	Page
48" Mower Deck - Housing, Covers, Spindles & Blades	4
48" Mower Deck - Pulleys, Belt, & Idler Arm	6
48" Mower Deck - Rollers	8
Decal Group - Brand & Model	10
Decal Group - Safety and Operation (North America Models)	12
Deck Lift Group	14
Electrical Group	18
Electrical Schematic - Charging Circuit S/N: 2017954955 & Below	20
Electrical Schematic - Charging Circuit S/N: 2017954956 & Above	22
Electrical Schematic - Cranking Circuit S/N: 2017954955 & Below	24
Electrical Schematic - Cranking Circuit S/N: 2017954956 & Above	26
Electrical Schematic - Ignition Grounding Circuit S/N: 2017954955 & Below	28
Electrical Schematic - Ignition Grounding Circuit S/N: 2017954956 & Above	30
Electrical Schematic - PTO Op. Pres. Circuit S/N: 2017954955 & Below	32
Electrical Schematic - PTO Op. Pres. Circuit S/N: 2017954956 & Above	34
Engine & PTO Group	36
Fuel Tank & Mount, Fuel Supply, and Evap Group	40
Hydraulic Group	42
Instrument Control Panel Group	44
Main Frame & Front Casters Group	46
Motion Control Group	48
Neutral Lockout Group	50
Operator Compartment Group S/N 2017954955 & Below	52
Operator Compartment Group S/N 2017954956 & Above	54
Parking Brake Group	56
Spindle Service Parts - 5061096	58
Transaxle Drive Group	60
Transaxle SERVICE Parts - Hydro-Gear ZT3400	62
Wheel & Tire Group	64
Torque Specification Chart	66

Not For Reproduction

Copyright © Briggs & Stratton. All Rights reserved

48" Mower Deck - Housing, Covers, Spindles & Blades

Note: Unless noted otherwise, use the standard torque specifications

Mfg. No: 5901675

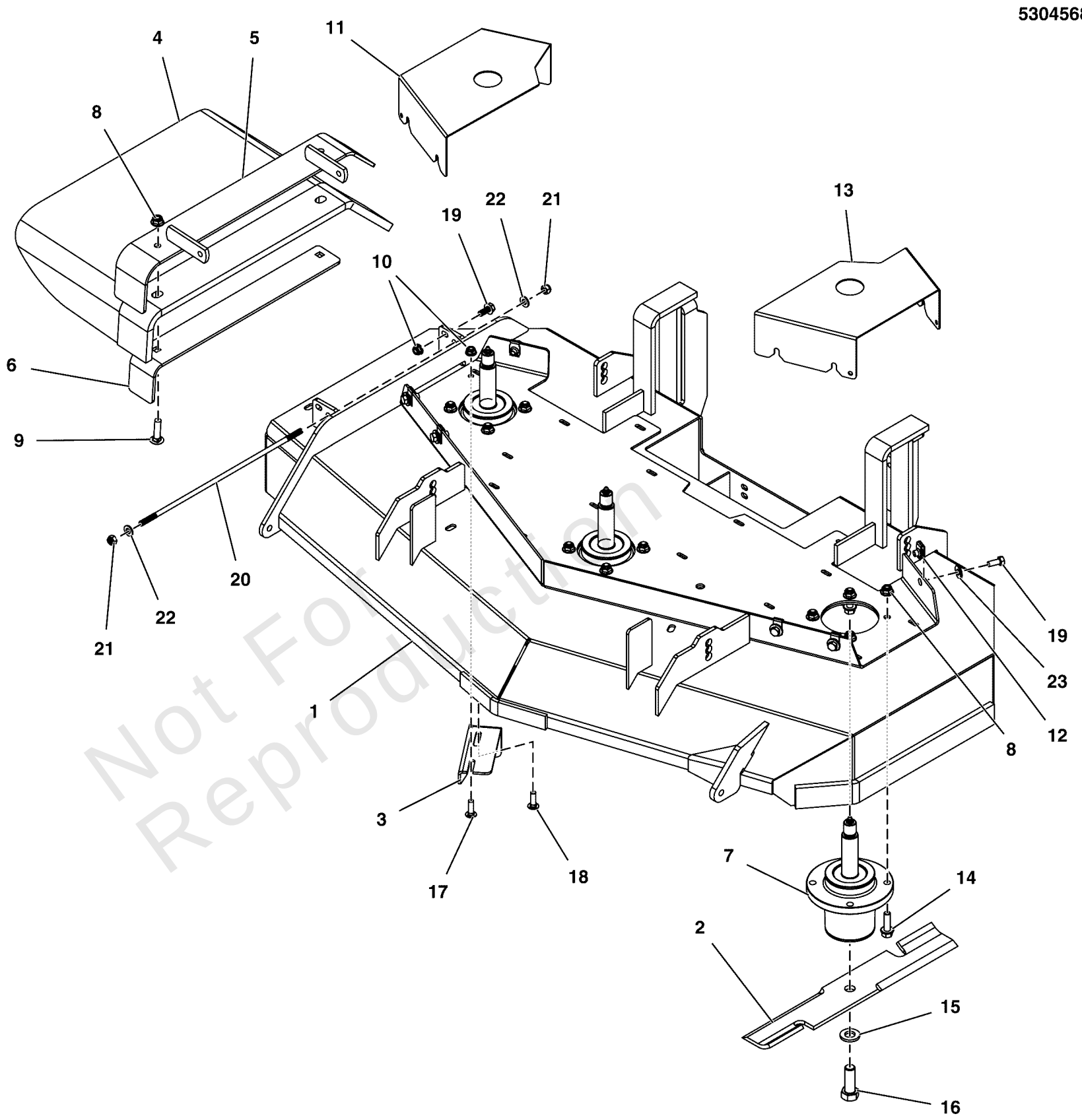

Not For Reproduction

Copyright © Briggs & Stratton. All Rights reserved

48" Mower Deck - Housing, Covers, Spindles & Blades

REF NO	PART NO	QTY	DESCRIPTION
1	5600969	1	DECK SHELL W/DECALS, 48, SRSZ1 (5415014B) -(Refer to Note: *)
2	5101986S	1	BLADES, SET OF THREE (3); 16.25 X.25 X 2.5, 1 X 3.5 -(SET OF 3 BLADES)
3	5401344A	1	PLATE, DEFLECTOR - BLK
4	5413498	1	CHUTE, RUBBER DISCHARGE CHUTE (5104441)
5	5413403A	1	WELD, MOUNT, DISCHARGE CHUTE - BLK
6	5413401A	1	SUPPORT, DISCHARGE CHUTE - BLK
7	5061096	3	SPINDLE ASSM, ALUMINUM, LONG SHAFT
8	5025394	14	NUT, 3/8 - 16 HEX NYLOCK FLANGE
9	5025146X12	2	BOLT, 3/8-16 X 1-1/2, CARRIAGE, GD5, CZ
10	5025392	3	NUT, 5/16-18 HEX NYLOCK FLANGE NUT
11	5415215B	1	GUARD, MOWER DECK, RH - RED
12	5022308	6	BODY CLIP, 5/16-18-7GA MATERIAL
13	5415216B	1	GUARD, MOWER DECK, LH - RED
14	5025390X10	12	BOLT, 3/8-16 X 1-1/4, FLANGE, GD 5, CZ
15	5025477	3	WASHER, BLADE BOLT, 9/16" F436, CZ
16	5025320X14	3	BOLT, 5/8-11 X 1-3/4 GD8
17	5025145X8	1	BOLT, 5/16-18 X 1, CARRIAGE, GD5, CZ
18	5025145X6	1	BOLT, 5/16-18 X 3/4, CARRIAGE, GD5, CZ
19	5025011X6	7	BOLT, 5/16-18 X 3/4 GD5
20	5042555	1	ROD, 5/16 X 13.75, TBE, CZ
21	5025045	2	NUT, 5/16-24 HEX NYLON LOCK
22	5025155	2	WASHER, 5/16" SAE
23	5025292	6	WASHER, 5/16 GRADE 9, FLAT

Not For Reproduction

Footnotes:

Note: * If replacing the deck shell with decals on units in serial number range 2018105410 & below, you must also order 5105849 - Qty: 1, 5025098 - Qty: 1, 5025089 - Qty: 1, 5025158 - Qty: 2.

Copyright © Briggs & Stratton. All Rights reserved

48" Mower Deck - Pulleys, Belt, & Idler Arm

Note: Unless noted otherwise, use the standard torque specifications

Mfg. No: 5901675

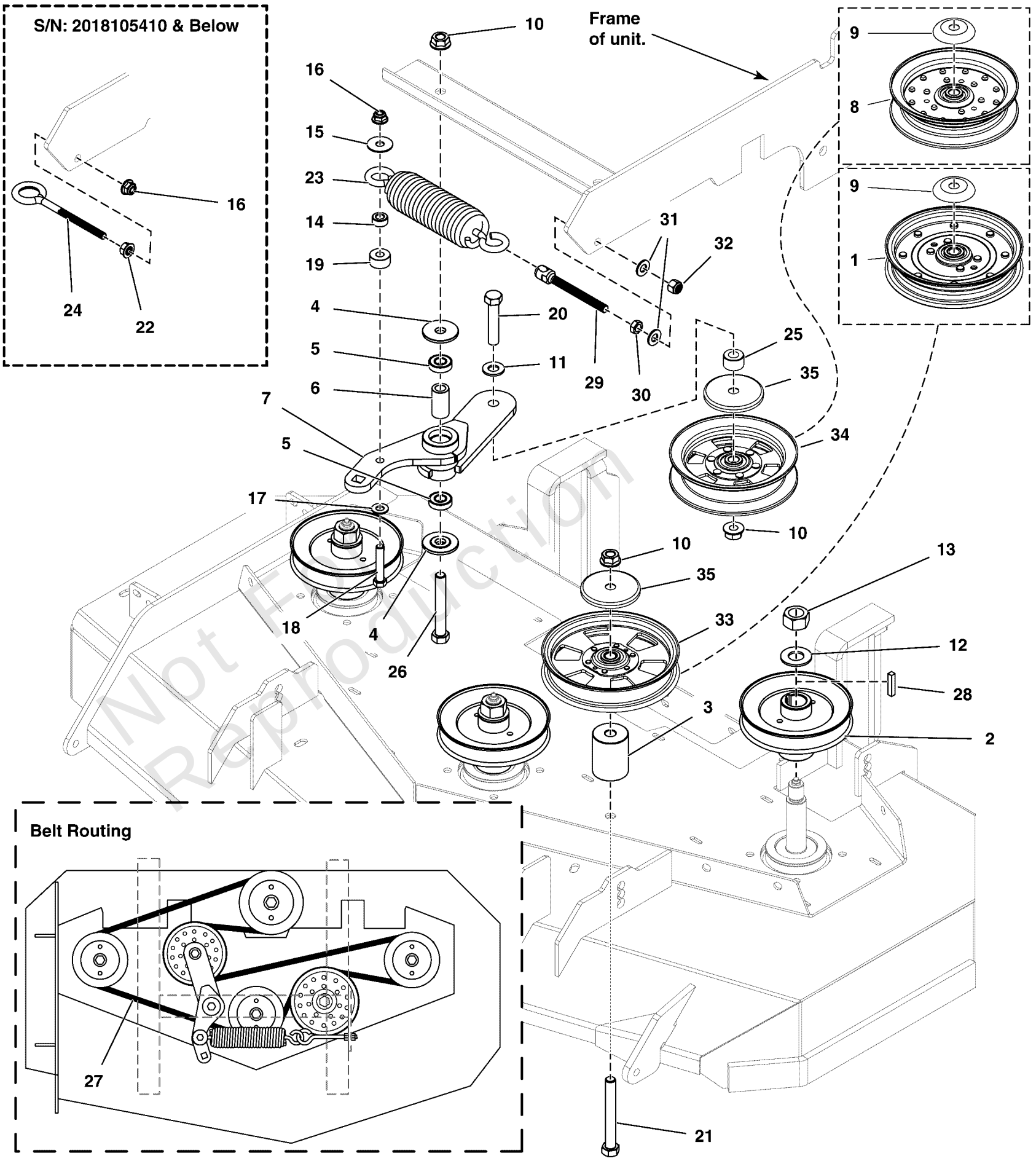

Not For Reproduction

Copyright © Briggs & Stratton. All Rights reserved

48" Mower Deck - Pulleys, Belt, & Idler Arm

REF NO	PART NO	QTY	DESCRIPTION
1	-----	1	Replace with: Pulley #5104717 & Debris Shield #5105145 -(S/N: 2017720519 and below)
2	5104680	3	PULLEY, B-SEC, 5.426OB, SPECIAL HUB
3	5104643	1	SPACER, .52 X 1.75 X 2.25, CZ
4	5103262	2	SPACER, IDLER ARM, 1/2, PM
5	7078243	2	BEARING, BALL, AXLE
6	5103812	1	SPACER, .52 X .84 X 1.53, PM
7	5415147AA	1	WELD, IDLER ARM, MOWER DECK - BLK
8	-----	1	USE 5104716 PULLEY + 5105145 SHIELD -(S/N: 2017720519 and below)
9	5101103	2	SHIELD, PULLEY BEARING, CZ -(S/N: 2017720519 and below)
10	5025396	3	NUT, Hex Flange, Nylock, 1/2-13
11	5025158	1	WASHER, 1/2 SAE
12	5025406	3	WASHER, 3/4 BELLEVILLE CL/ZC
13	5025405	3	NUT, 3/4-16 Hex
14	5044933	1	SPACER, .39 X .75 X .38, PM, CZ
15	5025165	1	WASHER, 3/8" Fender
16	5025394	1	NUT, 3/8 - 16 HEX NYLOCK FLANGE -(Qty: 2 - S/N: 2018105410 & Below)
17	5025156	1	WASHER, 3/8 SAE
18	80003522	1	HHCS, 3/8-16 X 2.00, GR5, ZINC/CLEAR
19	5046860	1	SPACER, .39 X 1.00 X .50, PM, CZ
20	5025017X20	1	BOLT, 1/2-13 X 2-1/2" GD5 CZ
21	5025017X32	1	BOLT, 1/2-13 X 4" GD5 CZ
22	5025128	1	NUT, 3/8-16 Hex Large Serrated Flange -(S/N: 2018105410 & Below)
23	5104996	1	SPRING, DECK, SRSZ1
24	5021812	1	EYE BOLT, 3/8-16 X 6, 3THRD, 1EYE, CZ -(S/N: 2018105410 & Below)
25	5101161	1	SPACER, .52 X 1.00 X .63, YZ
26	5025017X28	1	BOLT, 1/2-13 X 3-1/2, HEX HD, GD5, CZ (SV)
27	5104995	1	BELT, B-SEC, 115.29, ARAMID, WRAPED
28	5050407X20	3	KEY, 1/4 SQ X 2-1/2
29	5105849	1	SPRING PULLER, 1/2-20, 6.00 -(S/N: 2018105411 & Above)
30	5025089	1	NUT, 1/2-20 Hex Jam -(S/N: 2018105411 & Above)
31	5025158	2	WASHER, 1/2 SAE -(S/N: 2018105411 & Above)
32	5025098	1	NUT, Hex, Nylon Lock, 1/2-20 -(S/N: 2018105411 & Above)
33	5104717	1	PULLEY, FLT IDLR, 6.0 X 1.0 X .50, CZ -(S/N: 2017720520 and above)
34	5104716	1	PULLEY,IDLER,BACKSIDE,NOSEAM 6.25ODX.5ID -(S/N: 2017720520 and above)
35	5105145	2	SHIELD, BEARING, 1/2 ID X 2-7/8 OD, CZ -(S/N: 2017720520 and above)

Not For Reproduction

Copyright © Briggs & Stratton. All Rights reserved

48" Mower Deck - Rollers

Note: Unless noted otherwise, use the standard torque specifications

Mfg. No: 5901675

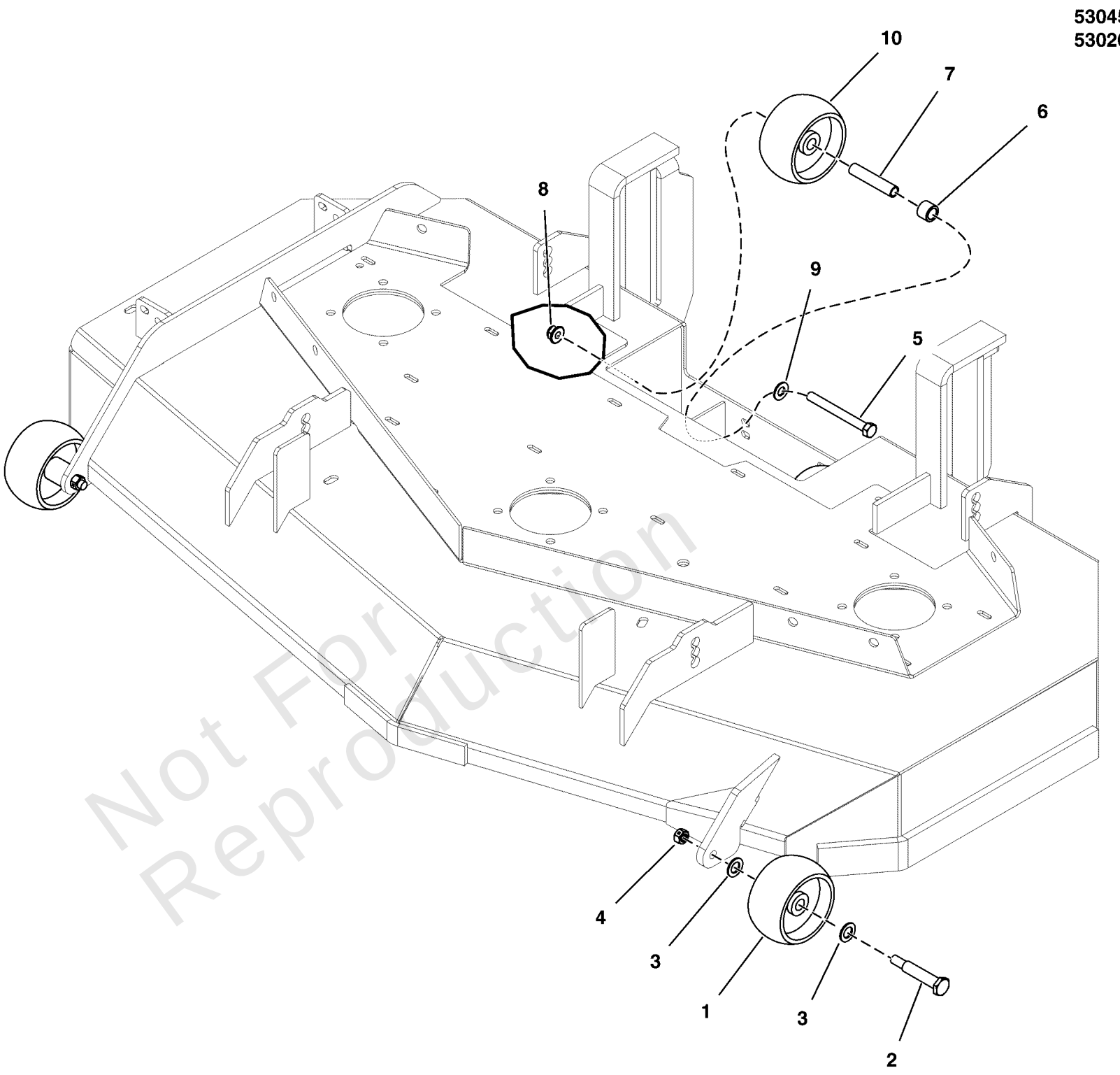

Not For Reproduction

Copyright © Briggs & Stratton. All Rights reserved

48" Mower Deck - Rollers

REF NO	PART NO	QTY	DESCRIPTION
1	1714760	2	WHEEL- 2.00 WIDE 3.88 DIA 0.531ID POLY
2	2108765	2	BOLT-WHEEL 3/8-16X2.781 .750 THRD
3	80003590	4	WASHER,.516IDX.875ODX.06,FLAT,ZC/CL
4	5025100	2	NUT, 3/8-16 HEX SIDE LOCK
5	5025013X28	2	BOLT, 3/8-16 X 3-1/2" GD5 CZ -(USA Models Only)
6	5047027	2	SPACER, .51 X .75 X .56, PM, CZ -(USA Models Only)
7	5104675	2	SPACER, .38 X .50 X 2.50, CZ -(USA Models Only)
8	5025394	2	NUT, 3/8-16 HEX NYLOCK FLANGE -(USA Models Only)
9	5025156	2	WASHER, 3/8 SAE -(USA Models Only)
10	1714760	2	WHEEL- 2.00 WIDE 3.88 DIA 0.531ID POLY -(USA Models Only)

Not For Reproduction

Copyright © Briggs & Stratton. All Rights reserved

5304554
5304567

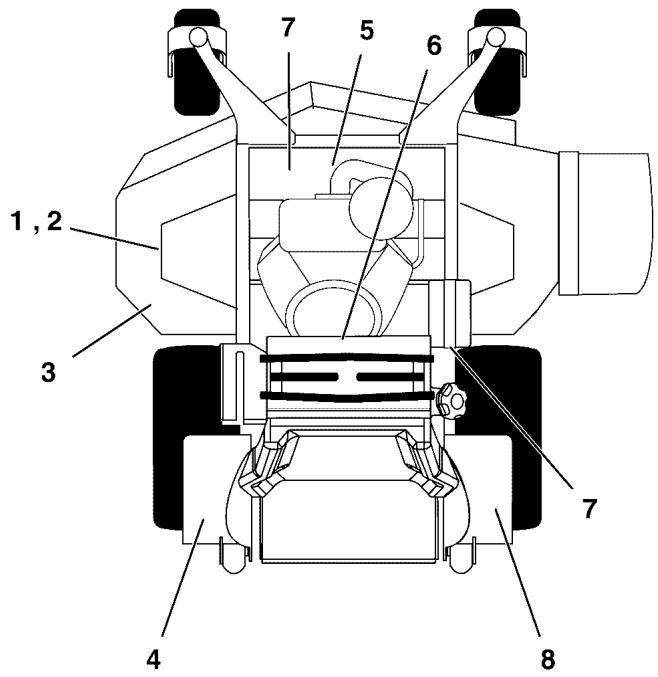

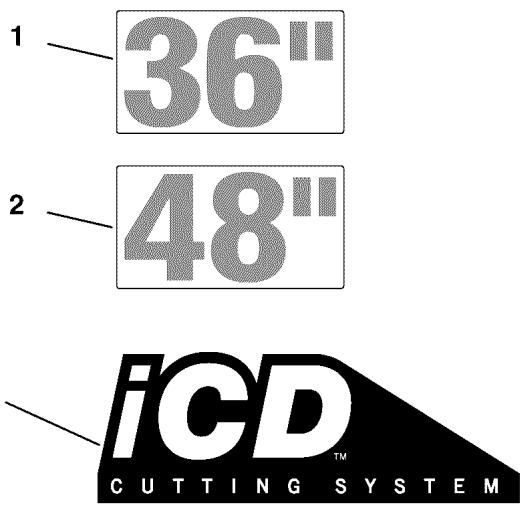

Not for Reproduction

Decal Group - Brand & Model

REF NO	PART NO	QTY	DESCRIPTION
1	5101322	1	DECAL, 36 -(Models with 36" Mower Decks)
2	5022811	1	DECAL, 48 -(Models with 48" Mower Decks)
3	5102210	1	DECAL, ICD CUTTING SYSTEM -(Models with 48" Mower Decks)
4	5105151	1	DECAL, FENDER, SRSZ1 / Z2, LH
5	5104756FS	1	DECAL, BRAND
6	5105083	1	DECAL, FERRIS, 1.796 X 9.00
7	5105082	2	DECAL, MODEL, Z1
8	5105150	1	DECAL, FENDER, SRSZ1 / Z2, RH

Not For Reproduction

Copyright © Briggs & Stratton. All Rights reserved

Decal Group - Safety and Operation (North America Models)

Note: Unless noted otherwise, use the standard torque specifications

Mfg. No: 5901675

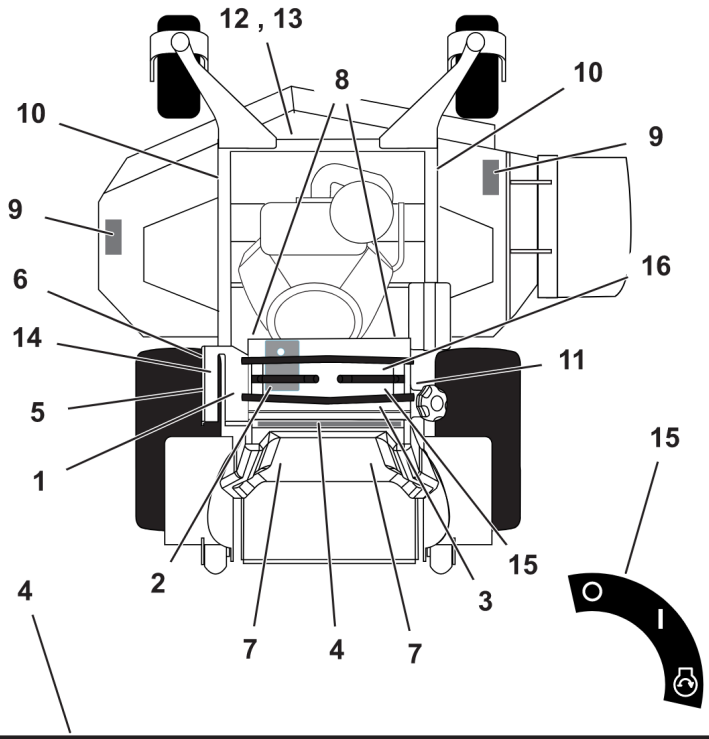

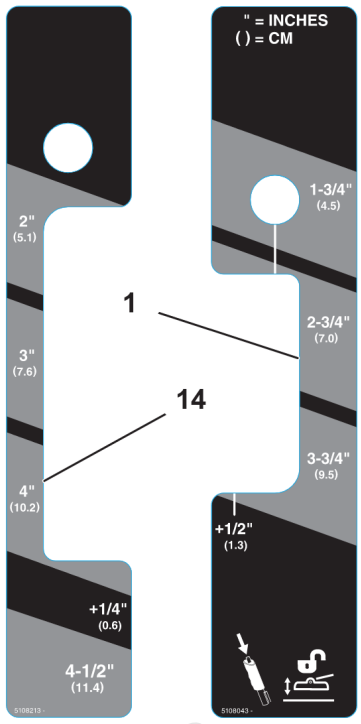

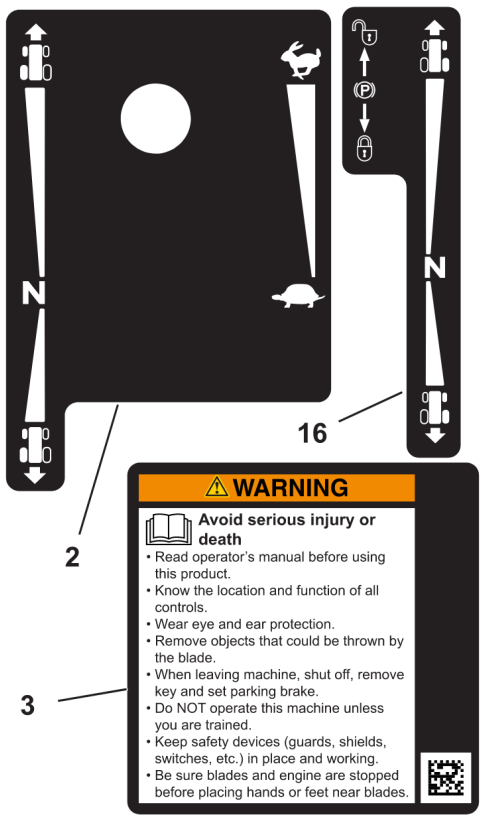

4

DANGER

Amputation hazard
Rotating blades cut off arms and legs.
• Stop the mower when children or others are near.
• Do not carry riders (especially children) even with the blades off. Keep bystanders away.
• Look down, behind and to the side before changing directions and while backing.

Loss of control
Always operate the mower using both hands on the control levers. Operating on slopes can be hazardous and cause loss of control.
• Avoid sudden turns or rapid speed changes. • If machine stops forward motion on a slope, stop the blades and drive slowly off the slope. • Go across slopes, NOT up and down. • Reduce speed and use extreme caution on slopes. • Do NOT operate on slopes when grass is wet.

5

The operator's manual is available in Spanish.
La manual del operador está disponible en Español.

5104269 A

System complies with Canadian standard ICES-002.

6

HYDRAULIC OIL RESERVOIR

USE SAE 20W-50 MOTOR OIL

5100957

7

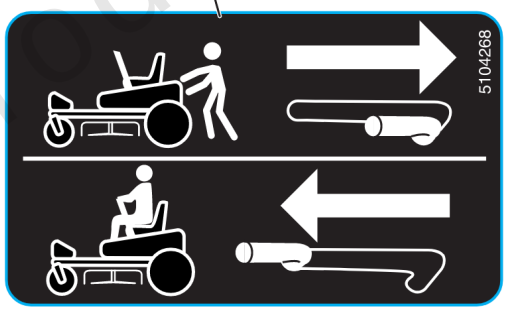

8

WARNING

Amputation and Pinch Point Hazard
To avoid injury from rotating parts, stay clear of parts and keep all shields and guards in place.

9

DANGER

Amputation and thrown objects hazard
• Keep hands and feet away from deck.
• Do not operate mower unless discharge chute or entire grass catcher is in its proper place.

10

WARNING

PINCH POINT
To avoid injury from loaded spring, read operator's manual before removing spring.

11

WARNING

Overfill of the fuel tank may cause a fire hazard
• Do not fill above the bottom of the filler neck as shown.

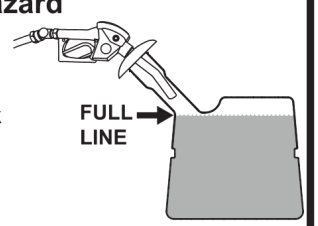

Fire Hazard
Gasoline is flammable.
Yard Debris is combustible.
• Allow engine to cool for at least 3 minutes before refueling.
• Keep unit cleaned of debris
• This equipment may create sparks that can start fires around dry vegetation. A spark arrester may be required. Contact local fire agencies for regulations relating to fire prevention requirements.

12

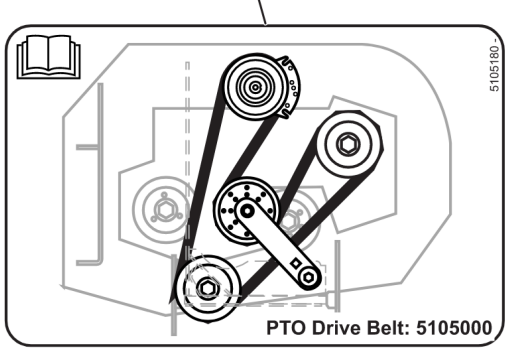

13

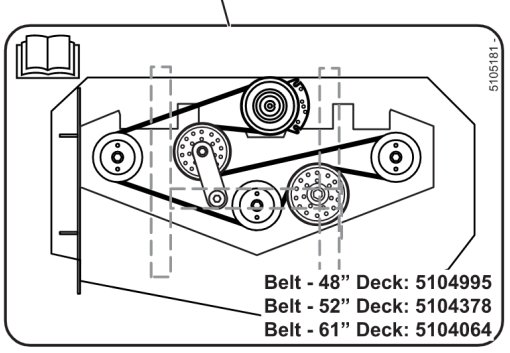

Not for Reproduction

Decal Group - Safety and Operation (North America Models)

REF NO	PART NO	QTY	DESCRIPTION
1	5108043FS	1	DECAL, Cutting Height
2	84008405	1	DECAL, Controls
3	84008379	1	DECAL, Warning/Safety
4	84008378	1	DECAL, Danger
5	5104269FS	1	DECAL
6	5105111FS	1	DECAL, WARNING/SAFETY
7	5104268FS	2	DECAL, INSTRUCTION
8	5103184YP	2	DECAL, WARNING, ENG
9	7101665YP	2	DECAL, DANGER
10	5061245SM	2	DECAL, PINCH POINT
11	5109418FS	1	DECAL, WARNING/SAFETY
12	5105180FS	1	DECAL, Instruction -(36" Models)
13	5105181FS	1	DECAL, BELT & BLADE -(48" Models)
14	5108213FS	1	DECAL, CUTTING HEIGHT
15	5048970SM	1	DECAL, Ignition Switch
16	84008406	1	DECAL, Controls

Not For Reproduction

Copyright © Briggs & Stratton. All Rights reserved

Deck Lift Group

Note: Unless noted otherwise, use the standard torque specifications

Mfg. No: 5901675

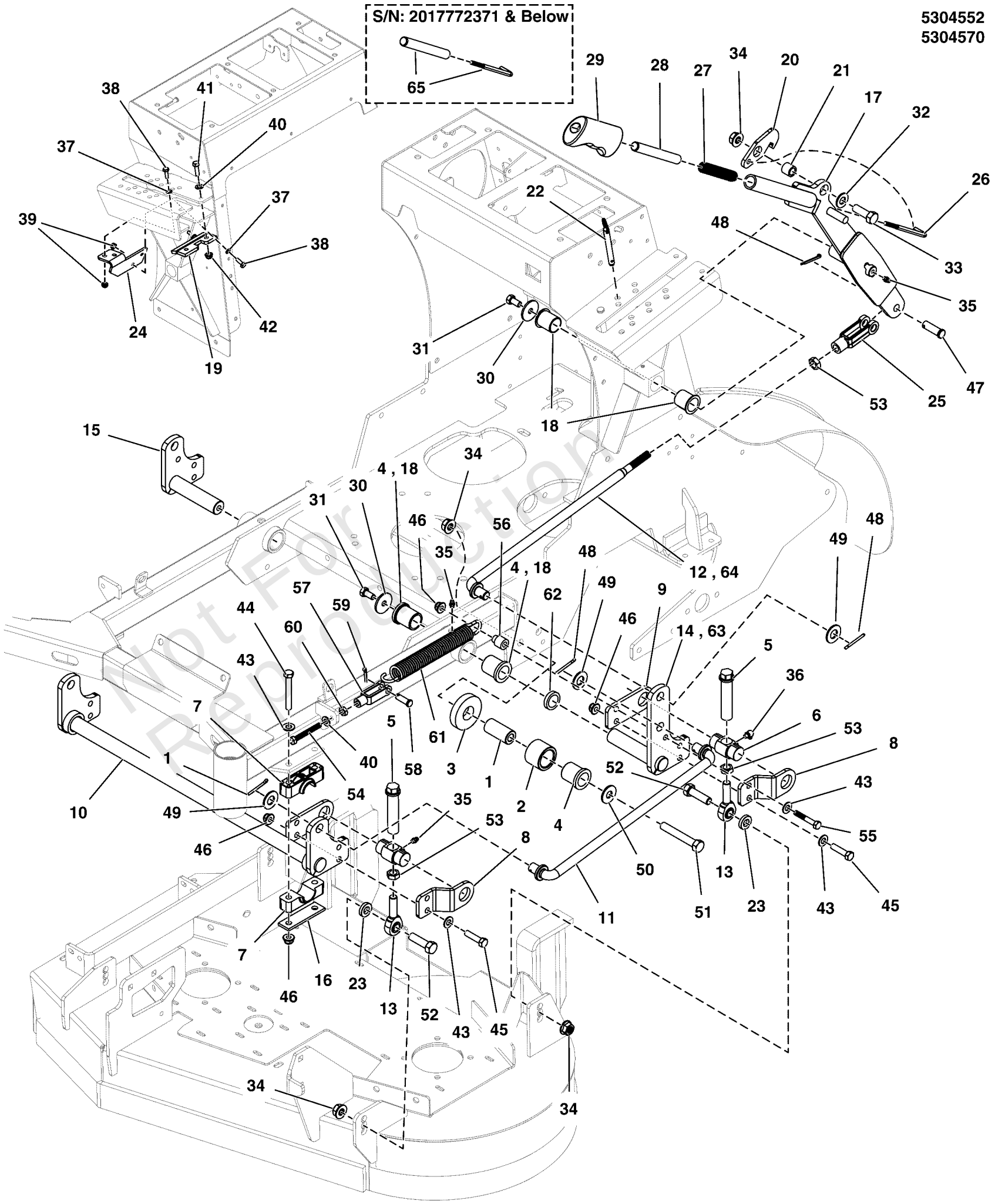

Not For Reproduction

Copyright © Briggs & Stratton. All Rights reserved

Deck Lift Group

REF NO	PART NO	QTY	DESCRIPTION
1	5100732FS	2	SPACER
2	5100731FS	2	ROLLER
3	5061010FS	2	WASHER
4	5021541SM	6	BUSHING, FLANGE -Qty: 2 - Models w/ 48" Mower Decks
5	5109915FS	4	ADJUSTER, HEIGHT
6	84003302	4	TRUNNION
7	5100634SM	4	PIVOT BLOCK, PLASTIC
8	5413899A	4	BRACKET, OUTER TRUNION MNT - BLK
9	5413900A	4	BRACKET, INNER TRUNION MNT - BLK
10	5414255A	1	WELD, DECK LIFT SHAFT, SRSZ1 - BLK
11	5104672	2	ROD, DECK LIFT TIMING, SRSZ1
12	5104673	1	ROD, MAIN DECK LIFT, SRSZ1 -(Models w/ 36" Mower Decks)
13	5104267	4	BALL JOINT, 1/2-20, RH, MALE, METAL RACE
14	5414258A	1	WELD, REAR LIFT PIVOT, LH - BLK -(Models w/ 36" Mower Decks)
15	5415289A	1	WELD, REAR LIFT PIVOT, RH - BLK
16	5403925AA	2	PLATE, PIVOT BLOCK SUPPORT - BLK
17	5413616A	1	WELD, DECK LIFT, STAND ON - BLK
18	5023343	2	BUSHING, 1.00 X 1.13 X 1.38, PLASTIC -Qty: 6 - Models with 48" Mower Decks
19	5414171A	1	PLATE, LATCH GUIDE - BLK
20	5414040A	1	PLATE, LATCH, PUSH BUTTON LIFT - BLK
21	5048049	1	SPACER, .50 X .75 X .66, CZ
22	5104610	1	PIN, HITCH, 3/8" DIA X 2.5" EL, CZ
23	5105392	4	WASHER, .515 X 1.00 X .25", CZ
24	84008584	1	PLATE, Support
25	5023174	1	CLEVIS, 1/2-20, STEEL, CLEAR ZINC
26	5105322	1	ROD, DECK LIFT LATCH -(S/N: 2017772372 & Above)
27	1723321	1	SPRING-COMP 0.715ODX 03.85 LG
28	5105323	1	BUTTON, PUSH, DECK LIFT, THREADED -(S/N: 2017772372 & Above)
29	1722291	1	GRIP,LIFT LEVER
30	5100548	3	WASHER, .390 X 1.50 X .109, CZ
31	5025443	3	BOLT, 3/8-16 X 3/4, PLT W/PATCH
32	5025158	1	WASHER, 1/2 SAE
33	5025017X12	1	BOLT, 1/2-13 X 1-1/2 GD5 CZ
34	5025396	7	NUT, Hex Flange, Nylock, 1/2-13
35	5020095	5	GREASE FITTING, 1/4-28 STRAIGHT
36	5025447	2	GREASE FITTING, 1/4-28, 90 DEGREE
37	5025154	4	WASHER, 1/4 SAE
38	5025010X6	4	BOLT, 1/4-20 X 3/4 GD5 CZ
39	5025391	4	NUT, 1/4-20 HEX NYLOCK FLANGE
40	5025155	4	WASHER, 5/16" SAE
41	5025011X8	2	BOLT, 5/16-18 X 1 GD5 CZ
42	5025392	2	NUT, 5/16-18 HEX NYLOCK FLANGE
43	5025156	14	WASHER, 3/8 SAE
44	5025013X22	4	BOLT, 3/8-16 X 2-3/4" GD5 CZ
45	5025013X12	8	BOLT, 3/8-16 X 1-1/2" GD5 CZ
46	5025394	14	NUT, 3/8-16 HEX NYLOCK FLANGE
47	5025328X12	1	PIN, CLEVIS, 1/2 X 1-1/2, CL/ZC

Not For Reproduction

Copyright © Briggs & Stratton. All Rights reserved

Deck Lift Group

Note: Unless noted otherwise, use the standard torque specifications

Mfg. No: 5901675

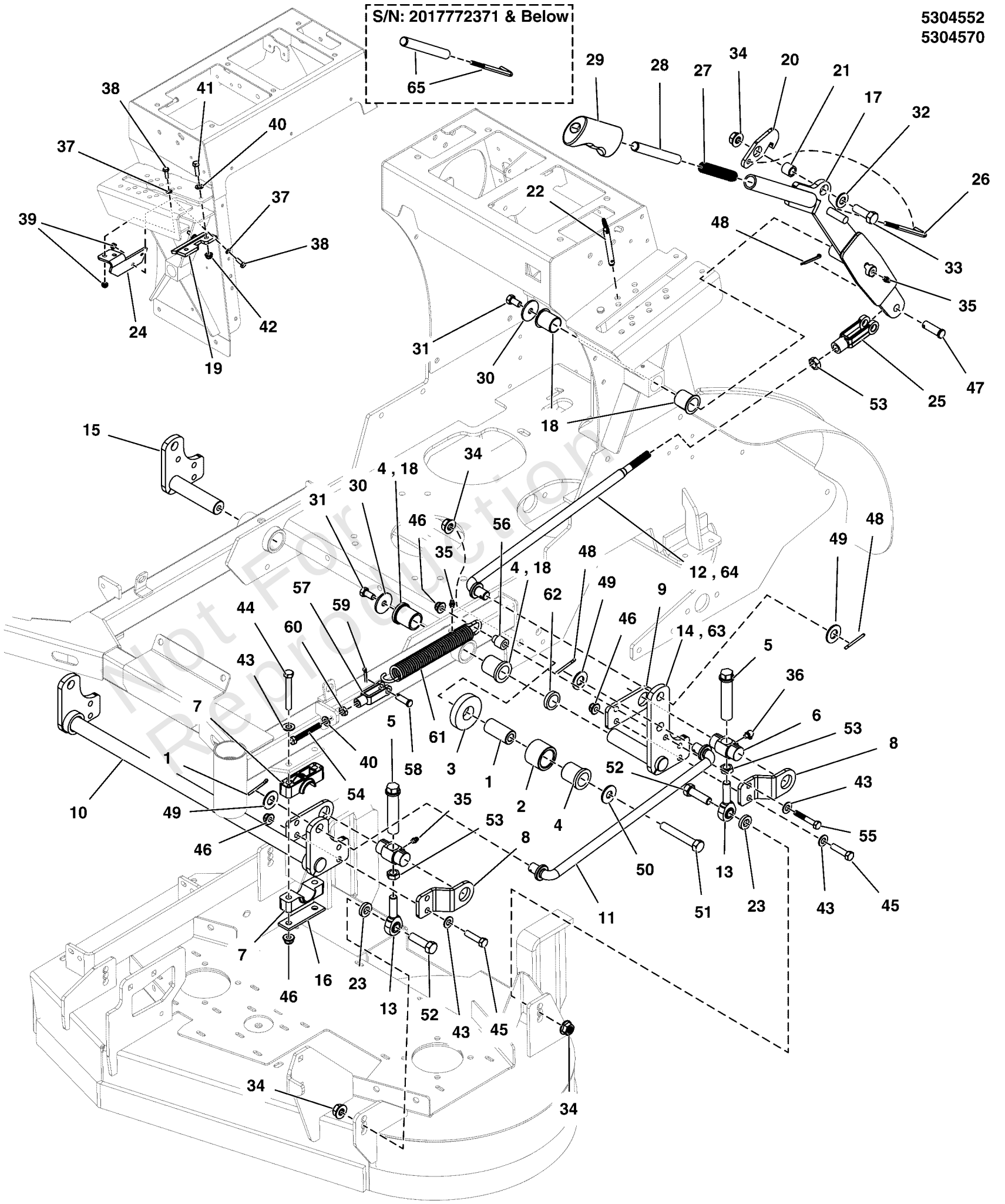

Not For Reproduction

Deck Lift Group

REF NO	PART NO	QTY	DESCRIPTION
48	5025203X10	6	PIN, COTTER, 1/8 X 1-1/4
49	5025281	5	WASHER, 5/8 SAE
50	5025150	2	WASHER, 1/2 USS
51	5025017X26	2	BOLT, 1/2-13 X 3-1/4, HEX HD, GD5, CZ (SV)
52	5025017X14	4	BOLT, 1/2-13 X 1-3/4 GD5 CZ
53	5025089	5	NUT, 1/2-20 HEX JAM
54	5025055X20	2	BOLT, 5/16-18 X 2-1/2 GD5 TFL, CZ
55	80003522	2	HHCS, 3/8-16 X 2.00, GR5, ZINC/CLEAR
56	1706644	2	SPACER,3/8X3/4X15/16
57	5100375	2	CLEVIS, 5/16-18, 3/8 PIN HOLE, CLR ZINC
58	5025214X9	2	PIN, CLEVIS, 3/8 X 1-1/8, PLATED
59	80002736	2	PIN, 3/32 X .750, COT, ZINC/CLEAR
60	5025388	2	NUT, 5/16-18 HEX JAM
61	1675232	2	SPRING-EXTN 1.12 ODX 09.06 LG .177 ECOAT
62	5041476	2	SPACER, 1.02 X 1.56 X .50
63	5415286A	1	WELD, REAR LIFT PIVOT, LH - BLK -(Models w/ 48" Mower Decks)
64	5105002	1	ROD, MAIN DECK LIFT, 14.00 -(Models w/ 48" Mower Decks)
65	5600953	1	KIT, RELEASE BUTTON AND ROD -(S/N: 2017772371 & Below)

Not For Reproduction

Copyright © Briggs & Stratton. All Rights reserved

5304550
5304631

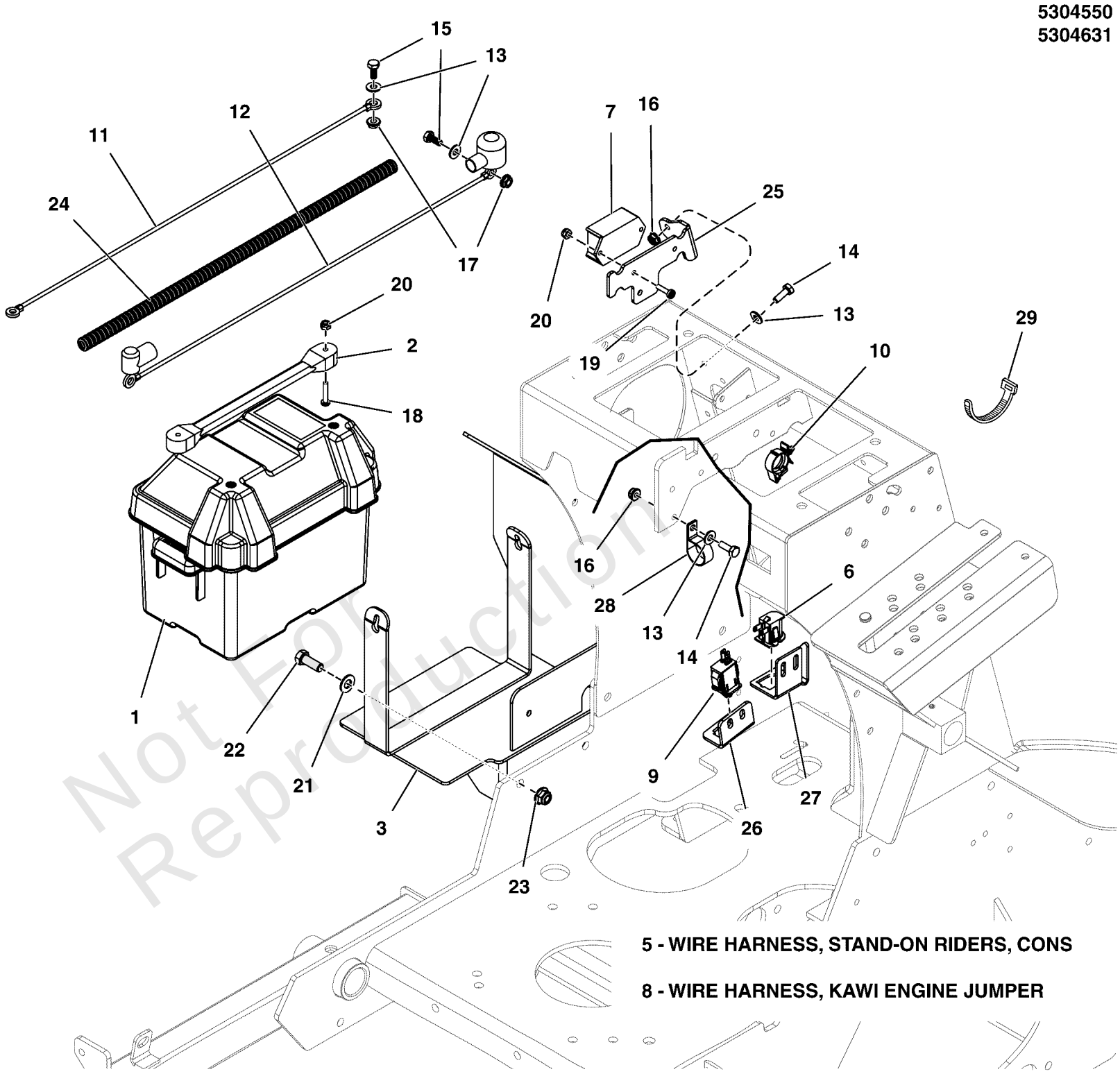

5 - WIRE HARNESS, STAND-ON RIDERS, CONS

8 - WIRE HARNESS, KAWI ENGINE JUMPER

Not For Reproduction

Electrical Group

REF NO	PART NO	QTY	DESCRIPTION
1	5100688	1	BATTERY BOX, W/ DRAIN HOLE
2	5021670	1	STRAP, RUBBER
3	5414971B	1	WELD, BATTERY MNT, SRSZ1 - RED
4	-----	1	BATTERY, 11U1L, 350 CCA
5	5415717	1	WIRE HARNESS, SRS CONSOLIDATED -(S/N: 2017954955 & Below)
5	5105537	1	HARNESS, Wiring, Stand-On ZTR -(S/N: 2017954956 & Above)
6	7023354	1	SWITCH, SEAT -(S/N: 2017954955 & Below)
6	1732004	1	SWITCH, Push Button, NO, Black -(S/N: 2017954956 & Above)
7	5104879	1	MODULE, TIME DELAY, NO DIODE
8	5104811	1	WIRE HARNESS, JUMPER, KAWI -(Models w/ Kawi Engines)
9	5101589	1	SWITCH, PLUNGER, NO, SINGLE POLE, SNAP-IN
10	5104705	5	ROSEBUD LOOM CLIP
11	5021406	1	BATTERY CABLE, NEG, 22, 1/4-5/16
12	5021405	1	BATTERY CABLE, POS, 22, 1/4-5/16
13	5025154	6	WASHER, 1/4 SAE
14	5025010X6	4	BOLT, 1/4"-20 X 3/4" GD5 YZ
15	-----	2	HHCS, 1/4-20 X 0.625, GR5, ZINC/CLEAR
16	5025391	4	NUT, 1/4-20 Hex Nylock Flange
17	5025126	2	NUT, 1/4-20 HEX SERR. FLANGE
18	5025270	2	SCREW, #10-24 X 1 RS, CZ
19	5025179X6	2	SCREW, #10-24 X 3/4" ROUND PHILLIPS
20	5025271	4	NUT, Hex, Nylon Lock, #10-24
21	5025156	2	WASHER, 3/8 SAE
22	5025013X8	2	BOLT, 3/8-16 X 1" GD5 CZ
23	5025394	2	NUT, 3/8 - 16 HEX NYLOCK FLANGE
24	5050927X19	1	WIRE LOOM, 3/8 ID X 19 IN
25	5415529A	1	PLATE, WIRE GUIDE / TDM MOUNT - BLK
26	-----	1	Refer to: Parking Brake Group
27	-----	1	Refer to: Operator Compartment Group
28	5021500	2	CLAMP, VINYL INSULATED, 1.00
29	5021029	2	TIE, SELF-LOCKING, 12"
30	5103761	2	FIR TREE MOUNT, PACKARD -(Not illustrated)

Not For Reproduction

Copyright © Briggs & Stratton. All Rights reserved

Electrical Schematic - Charging Circuit S/N: 2017954955 & Below

Note: Unless noted otherwise, use the standard torque specifications

Mfg. No: 5901675

5416017 (5415717) / SRS MAIN WIRE HARNESS - BRIGGS & STRATTON 386777 ENGINES

5416017A

(If internal schematic of the switch is not shown, the image of the switch represents the back view of the connector as it is connected to the switch.)

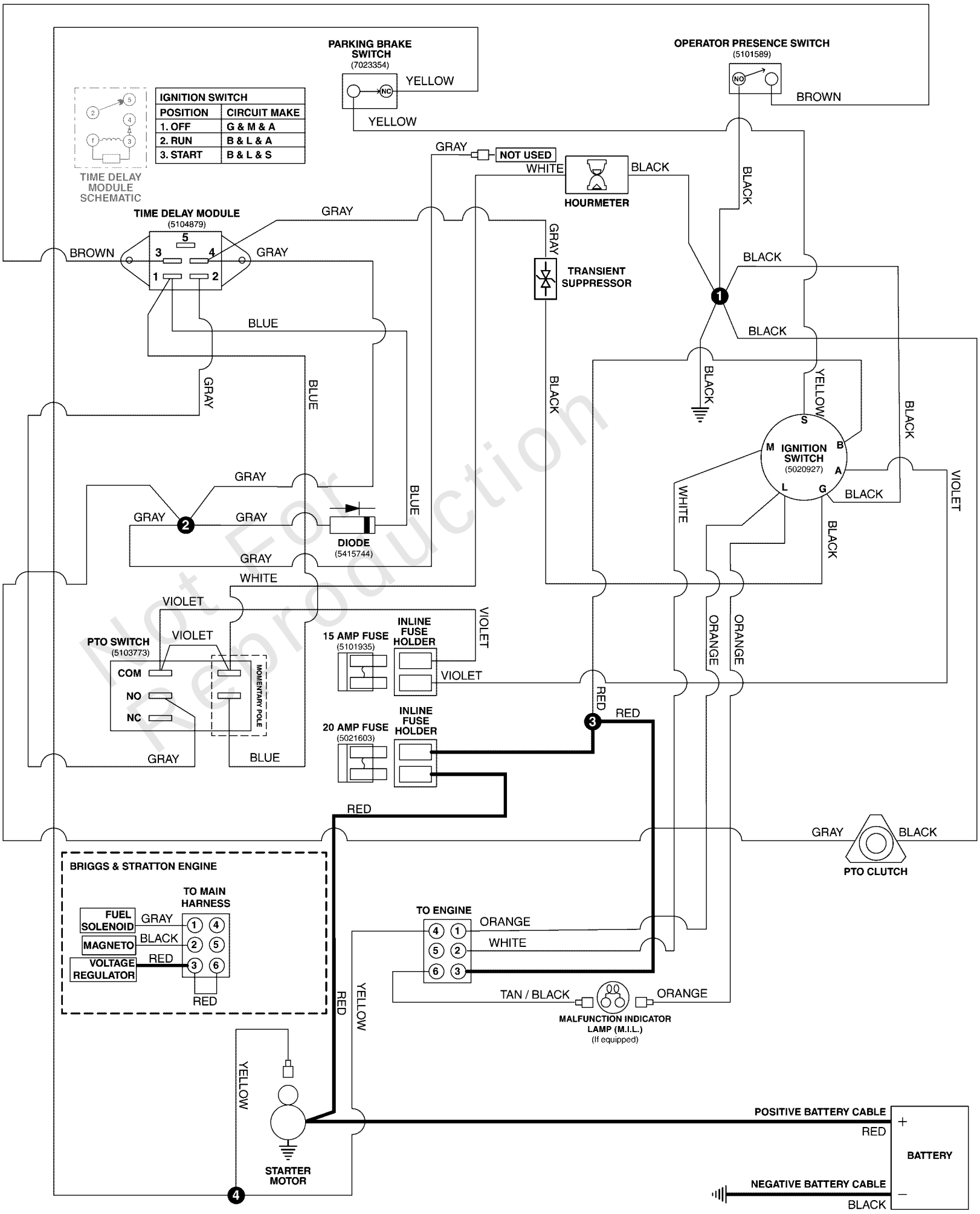

Not For Reproduction

Electrical Schematic - Charging Circuit S/N: 2017954955 & Below

REF NO	PART NO	QTY	DESCRIPTION

Not For Reproduction

Copyright © Briggs & Stratton. All Rights reserved

Electrical Schematic - Charging Circuit S/N: 2017954956 & Above

Note: Unless noted otherwise, use the standard torque specifications

Mfg. No: 5901675

5105537 / SRS MAIN WIRE HARNESS - BRIGGS & STRATTON 386777 ENGINES

5105537C

(If internal schematic of the switch is not shown, the image of the switch represents the back view of the connector as it is connected to the switch.)

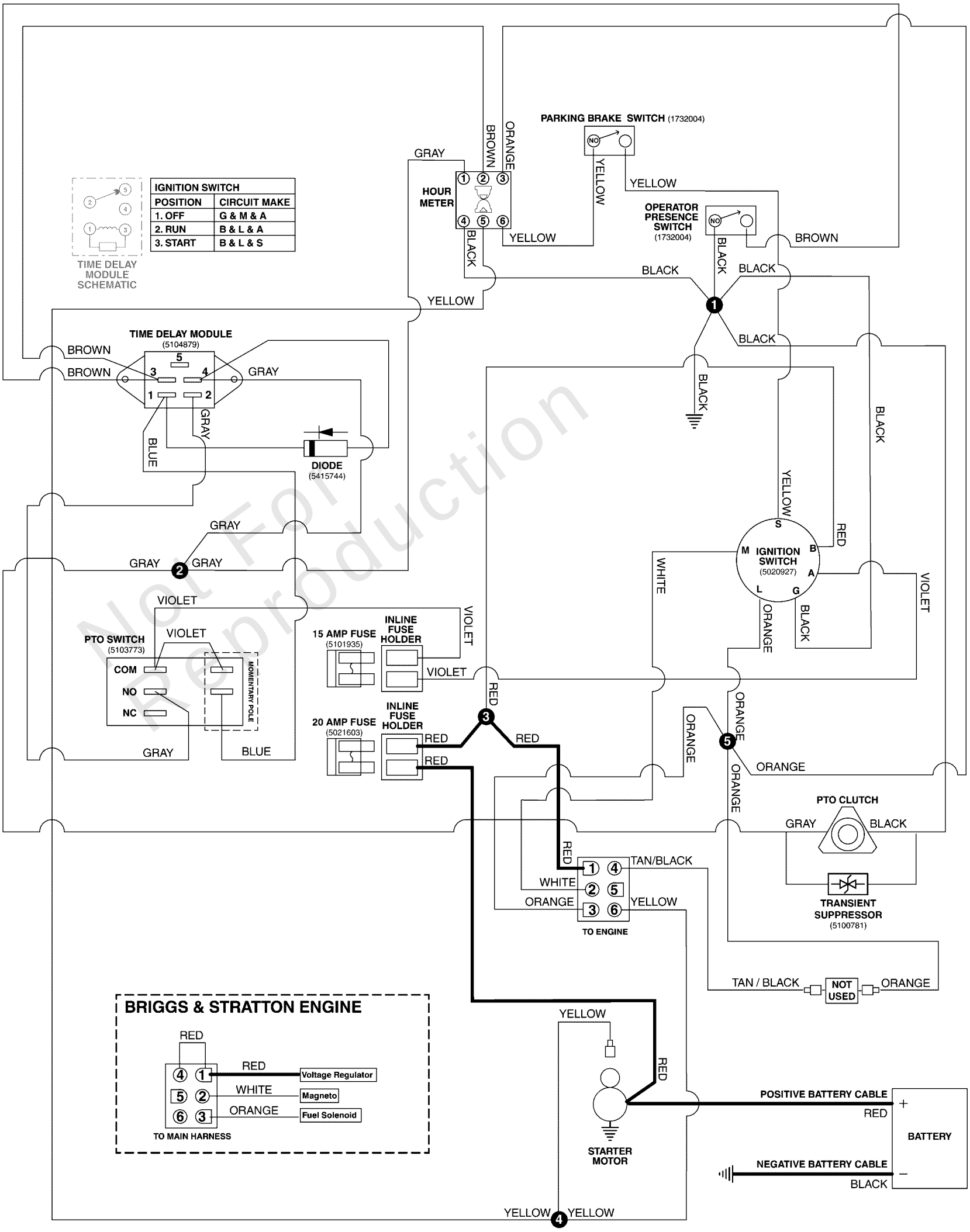

Not For Reproduction

Copyright © Briggs & Stratton. All Rights reserved

Electrical Schematic - Charging Circuit S/N: 2017954956 & Above

REF NO	PART NO	QTY	DESCRIPTION
5105537	5105537	1	HARNESS, Wiring, Stand-On ZTR

Not For Reproduction

Copyright © Briggs & Stratton. All Rights reserved

Electrical Schematic - Cranking Circuit S/N: 2017954955 & Below

Note: Unless noted otherwise, use the standard torque specifications

Mfg. No: 5901675

5416017 (5415717) / SRS MAIN WIRE HARNESS - BRIGGS & STRATTON 386777 ENGINES

5416017A

(If internal schematic of the switch is not shown, the image of the switch represents the back view of the connector as it is connected to the switch.)

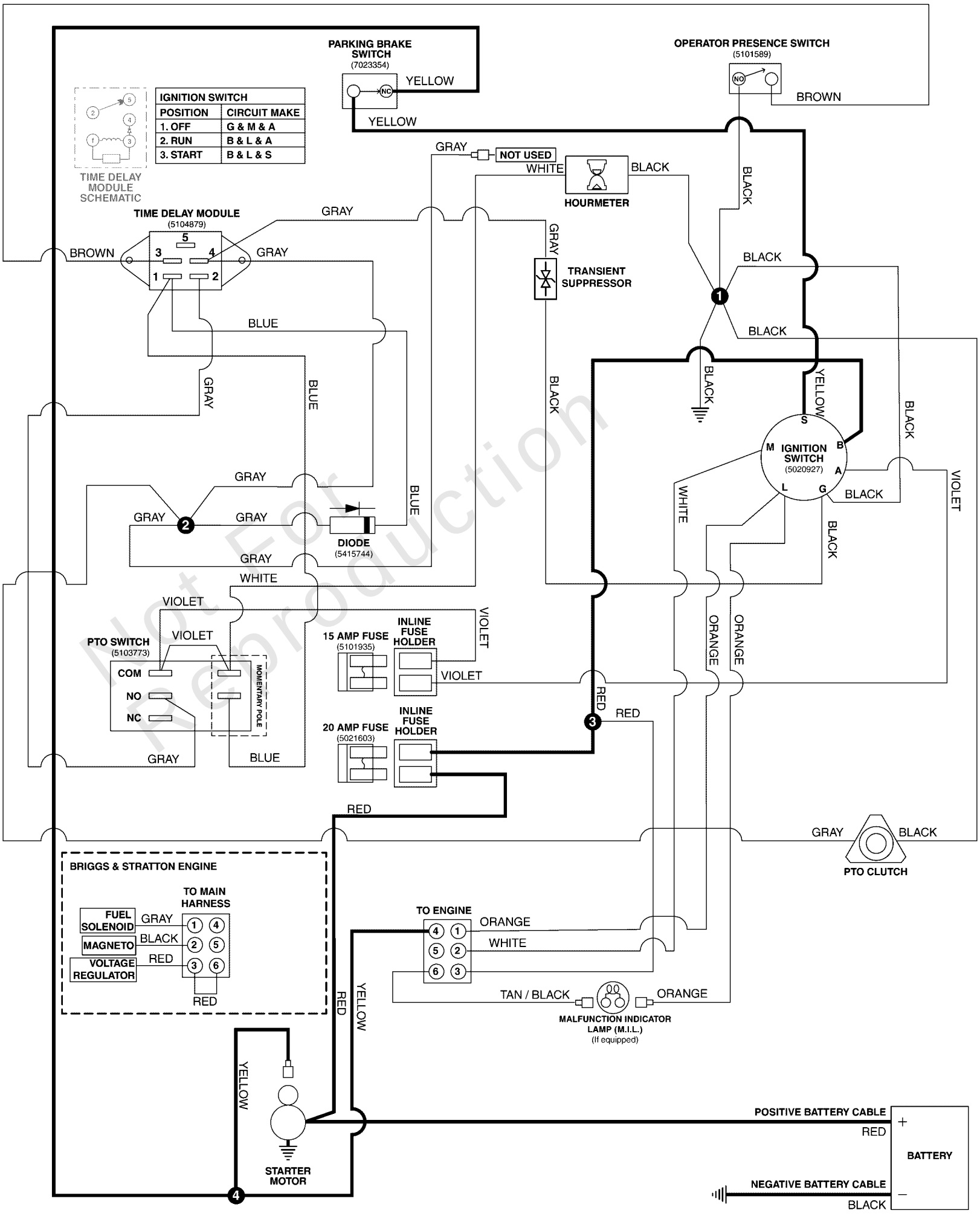

Not For Reproduction

Electrical Schematic - Cranking Circuit S/N: 2017954955 & Below

REF NO	PART NO	QTY	DESCRIPTION

Not For Reproduction

Copyright © Briggs & Stratton. All Rights reserved

Electrical Schematic - Cranking Circuit S/N: 2017954956 & Above

Note: Unless noted otherwise, use the standard torque specifications

Mfg. No: 5901675

5105537 / SRS MAIN WIRE HARNESS - BRIGGS & STRATTON 386777 ENGINES

5105537C

(If internal schematic of the switch is not shown, the image of the switch represents the back view of the connector as it is connected to the switch.)

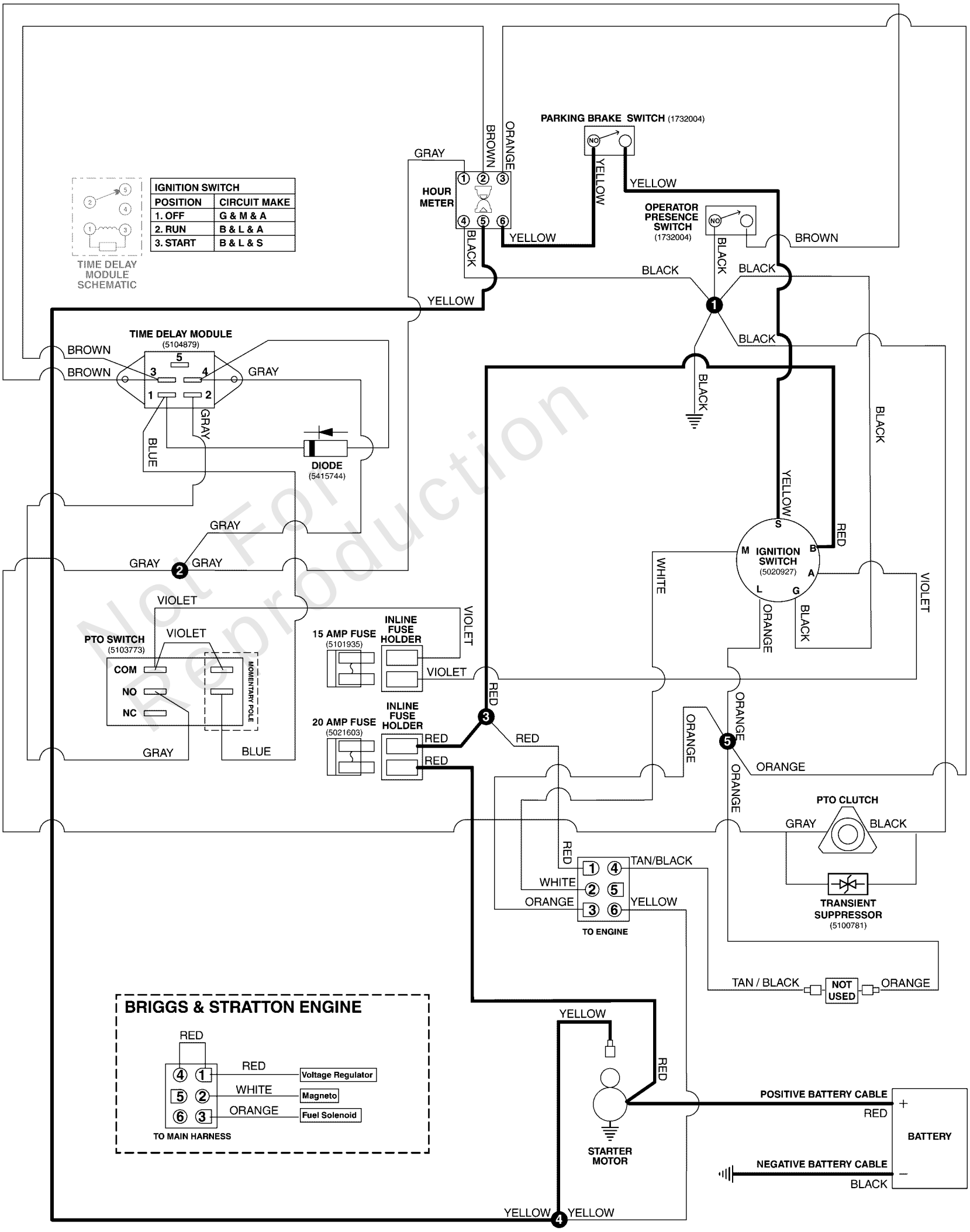

Not For Reproduction

Copyright © Briggs & Stratton. All Rights reserved

Electrical Schematic - Cranking Circuit S/N: 2017954956 & Above

REF NO	PART NO	QTY	DESCRIPTION
5105537	5105537	1	HARNESS, Wiring, Stand-On ZTR

Not For Reproduction

Copyright © Briggs & Stratton. All Rights reserved

Electrical Schematic - Ignition Grounding Circuit S/N: 2017954955 & Below

Note: Unless noted otherwise, use the standard torque specifications

Mfg. No: 5901675

5416017 (5415717) / SRS MAIN WIRE HARNESS - BRIGGS & STRATTON 386777 ENGINES

5416017A

(If internal schematic of the switch is not shown, the image of the switch represents the back view of the connector as it is connected to the switch.)

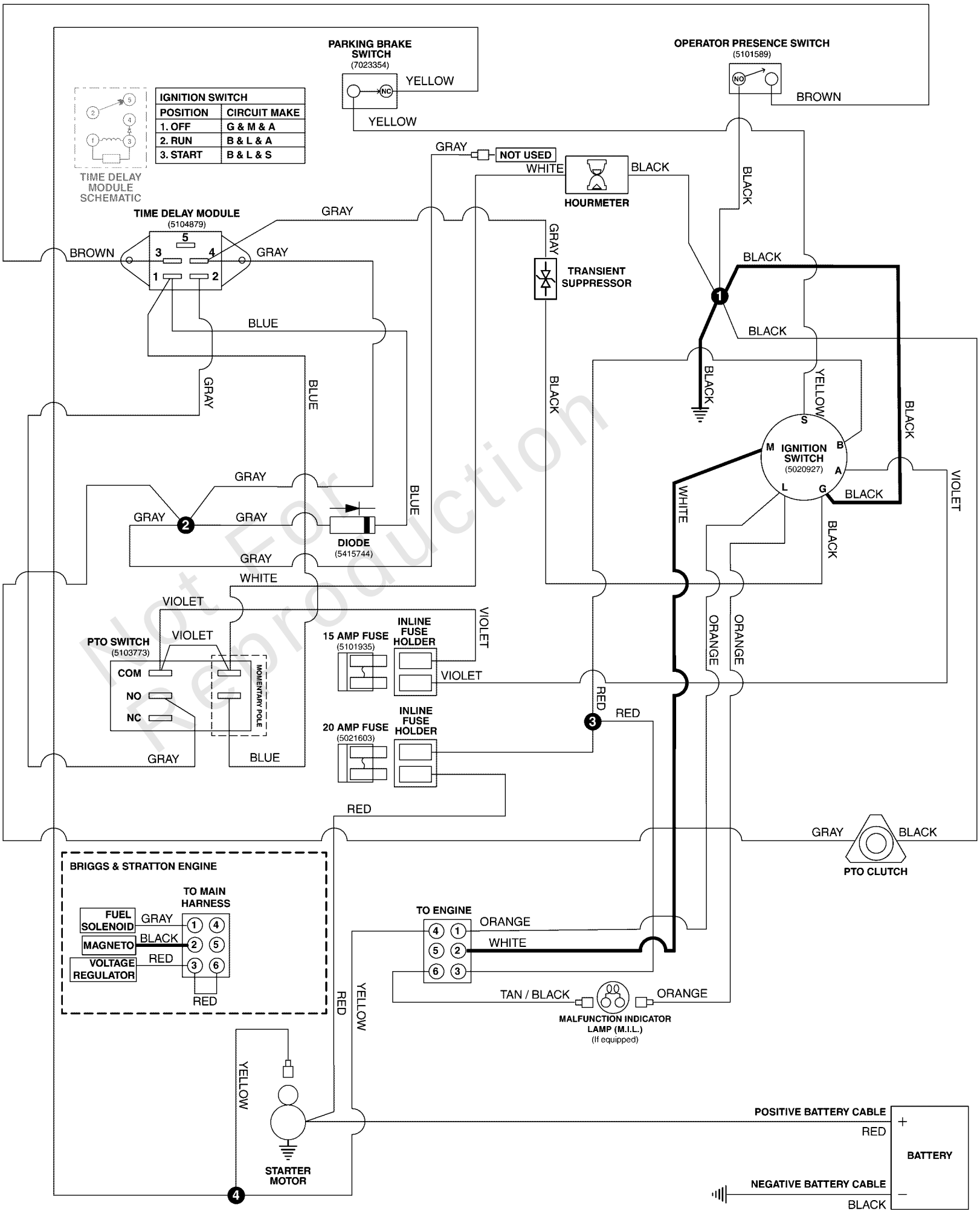

Not For Reproduction

Electrical Schematic - Ignition Grounding Circuit S/N: 2017954955 & Below

REF NO	PART NO	QTY	DESCRIPTION

Not For Reproduction

Copyright © Briggs & Stratton. All Rights reserved

Electrical Schematic - Ignition Grounding Circuit S/N: 2017954956 & Above

Note: Unless noted otherwise, use the standard torque specifications

Mfg. No: 5901675

5105537 / SRS MAIN WIRE HARNESS - BRIGGS & STRATTON 386777 ENGINES

5105537C

(If internal schematic of the switch is not shown, the image of the switch represents the back view of the connector as it is connected to the switch.)

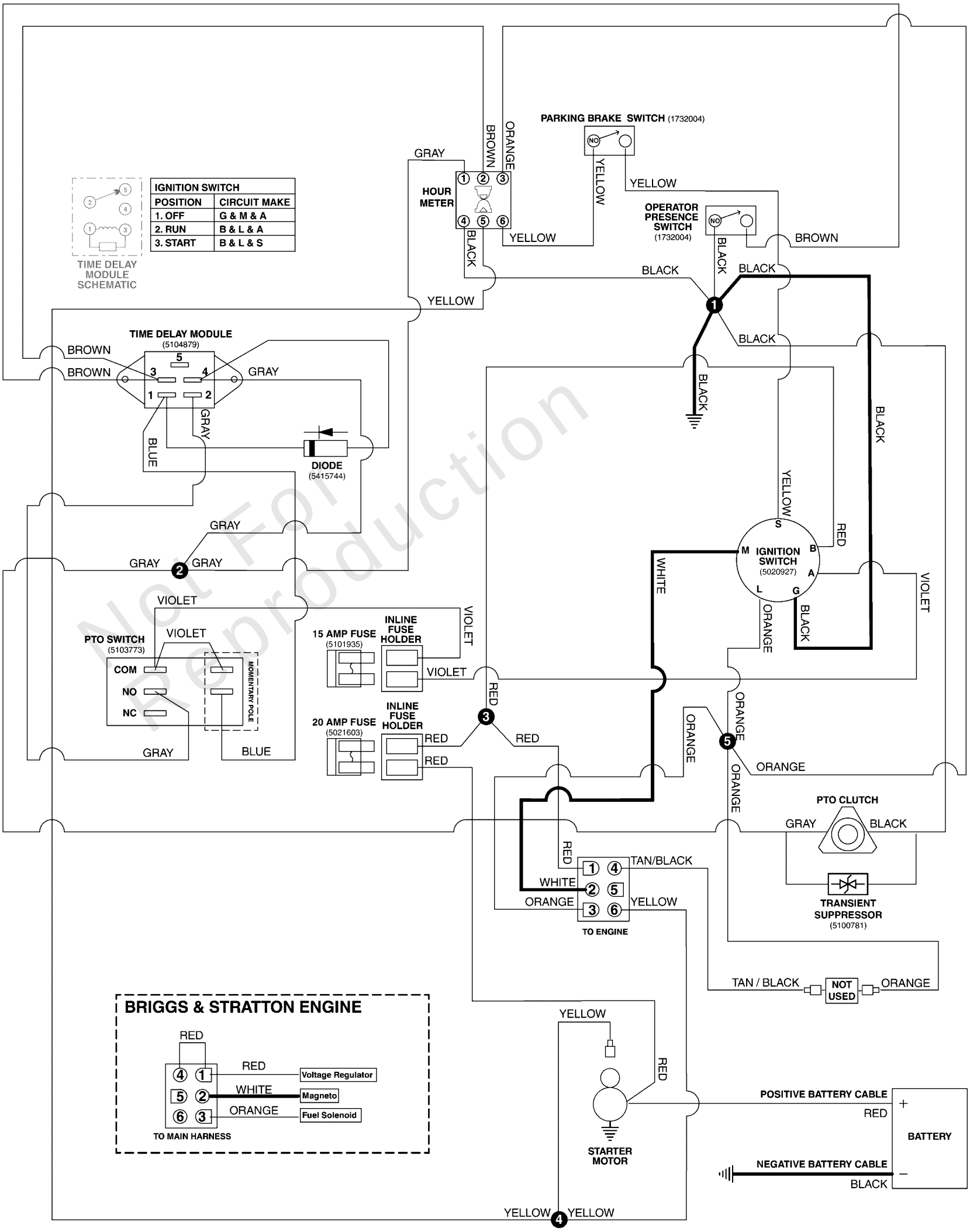

Not For Reproduction

Copyright © Briggs & Stratton. All Rights reserved

Electrical Schematic - Ignition Grounding Circuit S/N: 2017954956 & Above

REF NO	PART NO	QTY	DESCRIPTION
5105537	5105537	1	HARNESS, Wiring, Stand-On ZTR

Not For Reproduction

Copyright © Briggs & Stratton. All Rights reserved

Electrical Schematic - PTO Op. Pres. Circuit S/N: 2017954955 & Below

Note: Unless noted otherwise, use the standard torque specifications

Mfg. No: 5901675

5416017 (5415717) / SRS MAIN WIRE HARNESS - BRIGGS & STRATTON 386777 ENGINES

5416017A

(If internal schematic of the switch is not shown, the image of the switch represents the back view of the connector as it is connected to the switch.)

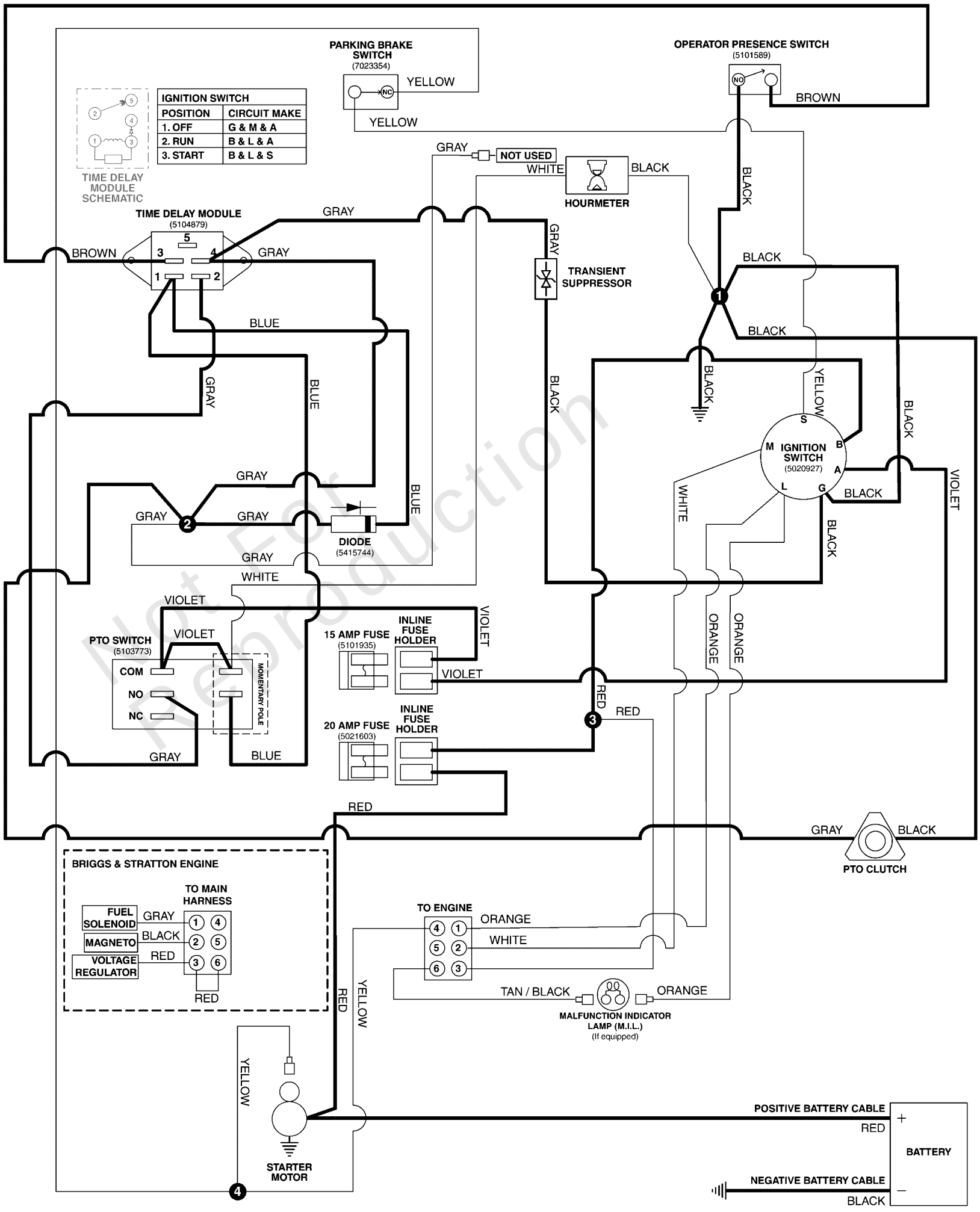

Not For Reproduction

Electrical Schematic - PTO Op. Pres. Circuit S/N: 2017954955 & Below

REF NO	PART NO	QTY	DESCRIPTION

Not For Reproduction

Copyright © Briggs & Stratton. All Rights reserved

Electrical Schematic - PTO Op. Pres. Circuit S/N: 2017954956 & Above

Note: Unless noted otherwise, use the standard torque specifications

Mfg. No: 5901675

5105537 / SRS MAIN WIRE HARNESS - BRIGGS & STRATTON 386777 ENGINES

5105537C

(If internal schematic of the switch is not shown, the image of the switch represents the back view of the connector as it is connected to the switch.)

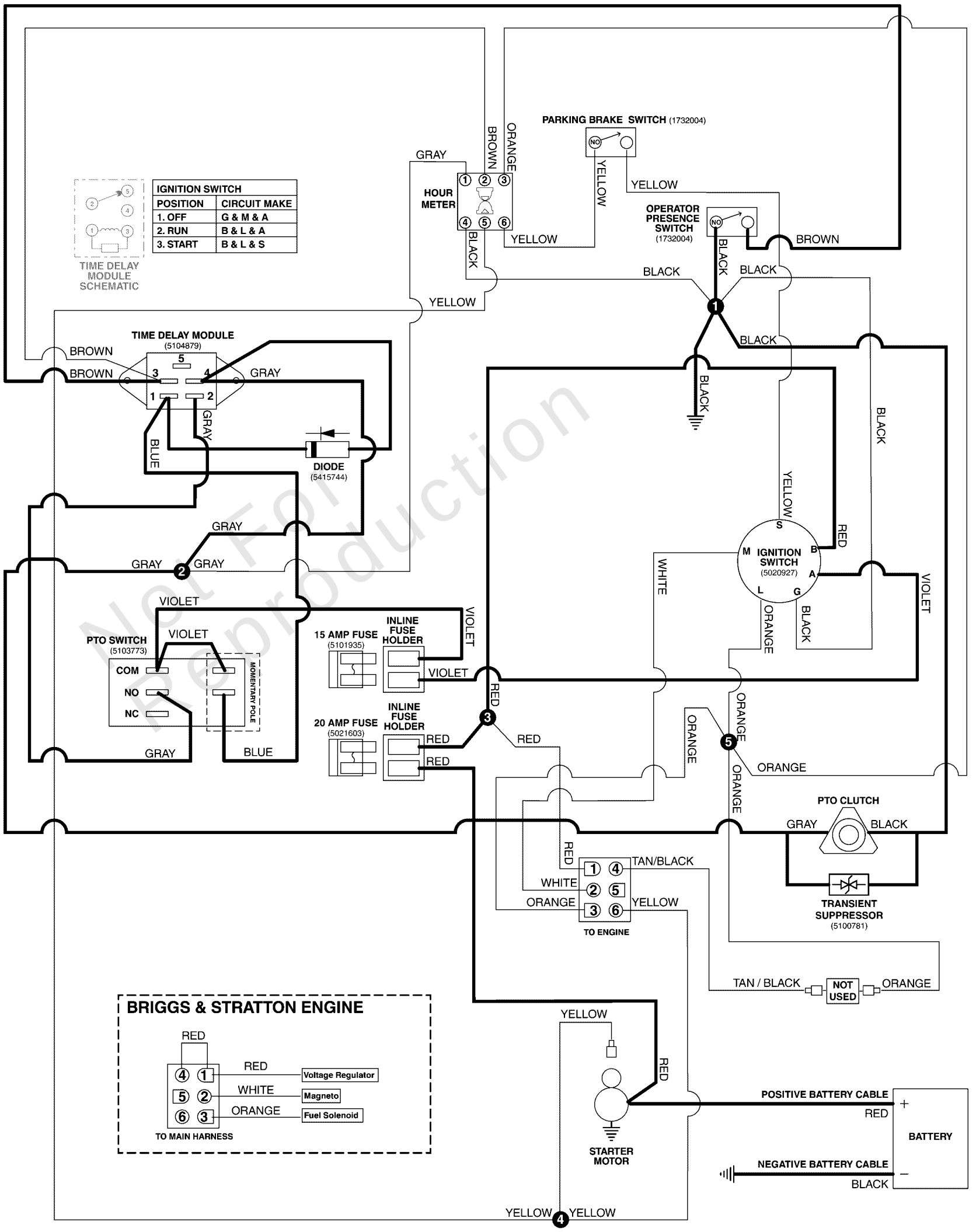

Not For Reproduction

Electrical Schematic - PTO Op. Pres. Circuit S/N: 2017954956 & Above

REF NO	PART NO	QTY	DESCRIPTION
5105537	5105537	1	HARNESS, Wiring, Stand-On ZTR

Not For Reproduction

Copyright © Briggs & Stratton. All Rights reserved

Note: Unless noted otherwise, use the standard torque specifications

Mfg. No: 5901675

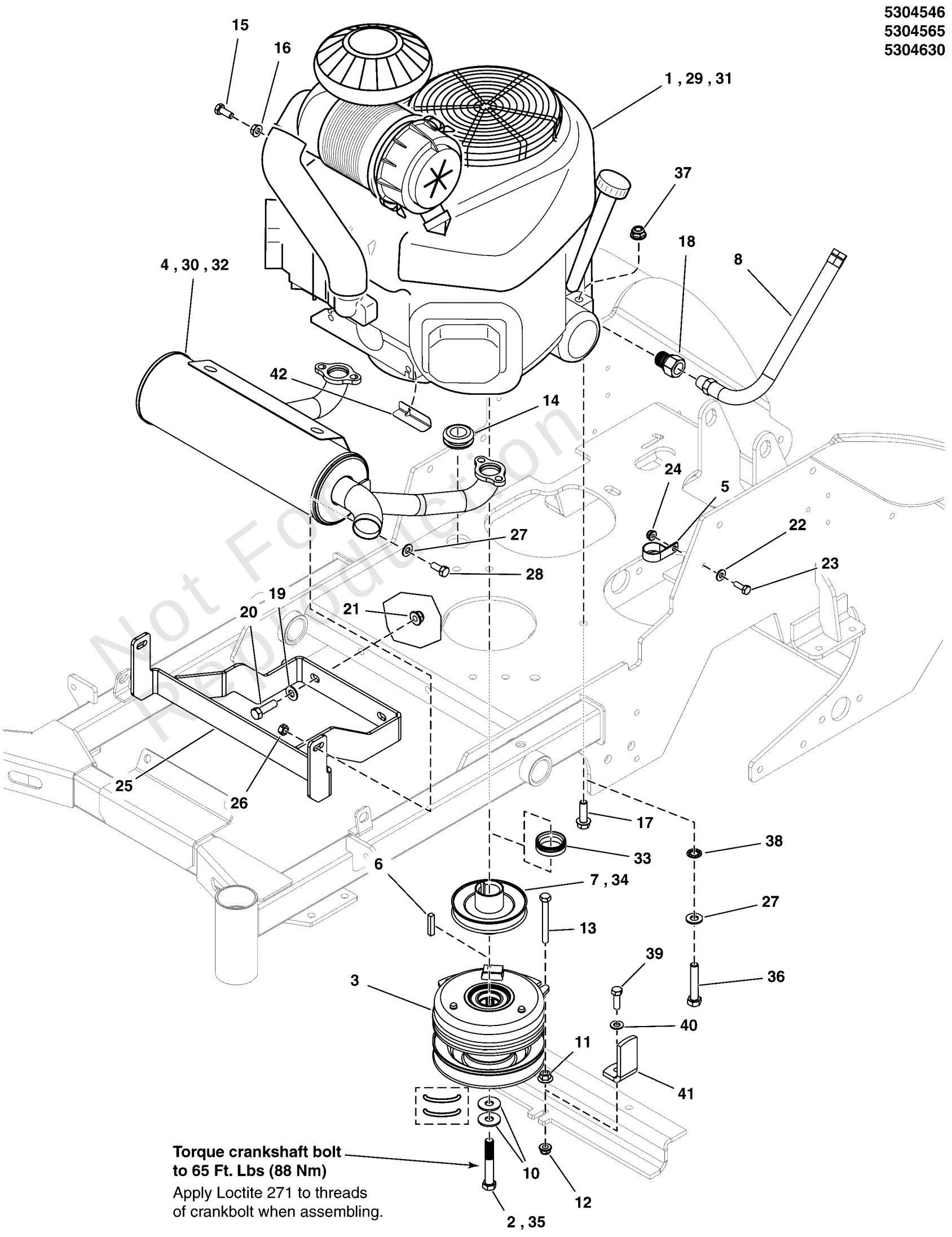

Not For Reproduction

Copyright © Briggs & Stratton. All Rights reserved

Engine & PTO Group

REF NO	PART NO	QTY	DESCRIPTION
1	-----	1	ENGINE, 19HP, KAWASAKI, FX600V -(Models w/ Kawi FX600V Engine)
2	5102865	1	BOLT, CRANKSHAFT, 7/16 X 2-3/4, PATCH, CZ -(Models w/ Kawi Engines)
3	5104954	1	CLUTCH, WARNER, 125 FTLBS - 1.13"
4	5105061	1	MUFFLER, 15-19HP KAWI, CATALYTIC COMBUST -(Models w/ Kawi FX600V Engine - S/N: 2017886158 & Below)
4	5105197	1	MUFFLER 15-19HP KAWI -(Models w/ Kawi FX600V Engine - S/N: 2017886159 & Above)
5	5021500	1	CLAMP, VINYL INSULATED, 1.00
6	5050407X10	1	KEY, 1/4" SQ. X 1-1/4
7	5104883	1	PULLEY, CRANKSHAFT, 1.1255 ID X 4.00 OD -(Models w/ Kawi Engines)
8	5048681	1	HOSE, OIL DRAIN
9	5101492	1	TIE,SELF-LOCKING, 24" -(Qty: 2 - Models w/ B&S Engines)
10	5025585	2	BELLEVILLE WASHER, 1.1875 X .442 X .098
11	5025139	1	NUT, 5/16-18 HEX SERRATED FLANGE (LARGE) -(S/N: 2017816237 & Below)
12	5025392	1	NUT, 5/16-18 HEX NYLOCK FLANGE NUT
13	5025011X22	1	BOLT, 5/16-18 X 2-3/4, GD 5, YZ -(S/N: 2017816237 & Below)
14	5103944	1	GROMMET, 7/8"ID, 1/4" THICK STK
15	5025494	1	BOLT, M8-1.25 X 16MM GD8.8 -(Models w/ Kawi Engines)
16	5025355	1	NUT, M8-1.25 Hex Serrated Flange -(Models w/ Kawi Engines)
17	5025532	4	BOLT, HEX FLG, SER, GD5 3/8-16 X 1-1/4" PACH CZ -(Models w/ Kawi Engines)
18	5022234	1	ADAPTER, Oil Drain -(Models w/ Kawi Engines)
19	5025156	2	WASHER, 3/8 SAE -(S/N: 2017886158 & Below)
20	5025013X10	2	BOLT, 3/8-16 X 1-1/4" GD5 CZ -(S/N: 2017886158 & Below)
21	5025394	2	NUT, 3/8 - 16 HEX NYLOCK FLANGE -(S/N: 2017886158 & Below)
22	5025154	1	WASHER, 1/4 SAE
23	5025010X6	1	BOLT, 1/4"-20 X 3/4" GD5 YZ
24	5025391	1	NUT, 1/4-20 Hex Nylock Flange
25	5415187A	1	WELD, EXHAUST SUPPORT BRACKET - BLK -(S/N: 2017886158 & Below)
26	80003675	2	NUT, 5/16-1/8, HEX, CNTR LK, ZINC PHOS/OIL -(S/N: 2017886158 & Below)
27	5025155	2	WASHER, 5/16" SAE -(Kawasaki Models - S/N: 2017886158 & Below)
27	5025155	6	WASHER, 5/16" SAE -(Briggs & Stratton Models - S/N: 2017886158 & Below)
27	5025155	4	WASHER, 5/16" SAE -(Briggs & Stratton Models - S/N: 2017886159 & Above)
28	5025011X6	2	BOLT, 5/16-18 X 3/4 GD5
29	-----	1	ENGINE, 22HP, KAWASAKI, FX691V -(Models w/ Kawi FX691V Engine)
30	5104163	1	MUFFLER, HORIZONTAL, KAWASAKI -(Models w/ Kawi FX691V Engine - S/N: 2017886158 & Below)
30	5105110	1	MUFFLER 22 HP KAWI CATALYTIC COMBUSTION -(Models w/ Kawi FX691V Engine - S/N: 2017886159 & Above)
31	-----	1	ENGINE, 23HP, BRIGGS VANGUARD -(Models w/ B&S Engines)

Not For Reproduction

Copyright © Briggs & Stratton. All Rights reserved

Note: Unless noted otherwise, use the standard torque specifications

Mfg. No: 5901675

5304546
5304565
5304630

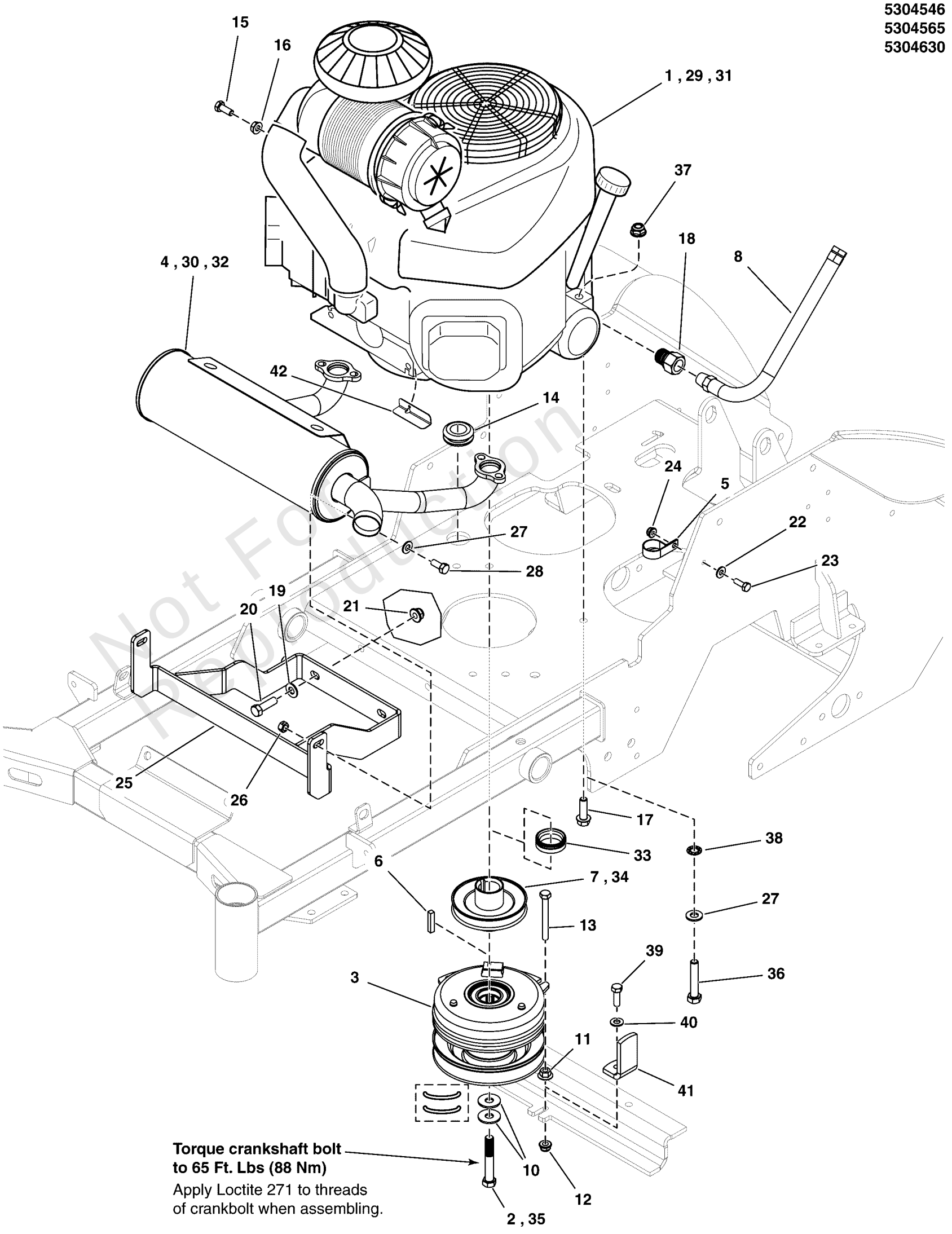

Not For Reproduction

Copyright © Briggs & Stratton. All Rights reserved

Engine & PTO Group

REF NO	PART NO	QTY	DESCRIPTION
32	5105058	1	MUFFLER, 23HP BRIGGS VANGUARD, SRSZ1 -(Models w/ B&S Engines - S/N: 2017886158 & Below)
32	5105196	1	MUFFLER 23HP VANGUARD SRSZ1 (SHORT) -(Models w/ B&S Engines - S/N: 2017886159 & Above)
33	5105074	1	SPACER, 1.50 X 1.125 X .50, CZ -(Models w/ B&S Engines)
34	5105067	1	PULLEY,CRANKSHAFT,1.1255IDX4.00OD,BRIGGS -(Models w/ B&S Engines)
35	5102866	1	BOLT, CRANKSHAFT, 7/16-20 X 3, GD8 -(Models w/ B&S Engines)
36	5025025X14	4	BOLT, 5/16-24 X 1-3/4, GD8, PHOS -(Models w/ B&S Engines)
37	5025616	4	NUT, 5/16-24, TOP LOCK FLANGE, GD8 PHOS -(Models w/ B&S Engines)
38	5025188	4	WASHER, 5/16" Internal Tooth Lock -(Models w/ B&S Engines)
39	5025011X8	1	BOLT, 5/16-18 X 1" GRD5 YZ -(S/N: 2017816238 & Above)
40	5025155	1	WASHER, 5/16" SAE -(S/N: 2017816238 & Above)
41	5416468A	1	PLATE, CLUTCH ANCHOR, Z1 - BLK -(S/N: 2017816238 & Above)
42	5416700	1	PLATE, SS HEAT SHIELD, Z1-BRIGGS -(Models w/ B&S Engines)

Not For Reproduction

Copyright © Briggs & Stratton. All Rights reserved

Fuel Tank & Mount, Fuel Supply, and Evap Group

Note: Unless noted otherwise, use the standard torque specifications

Mfg. No: 5901675

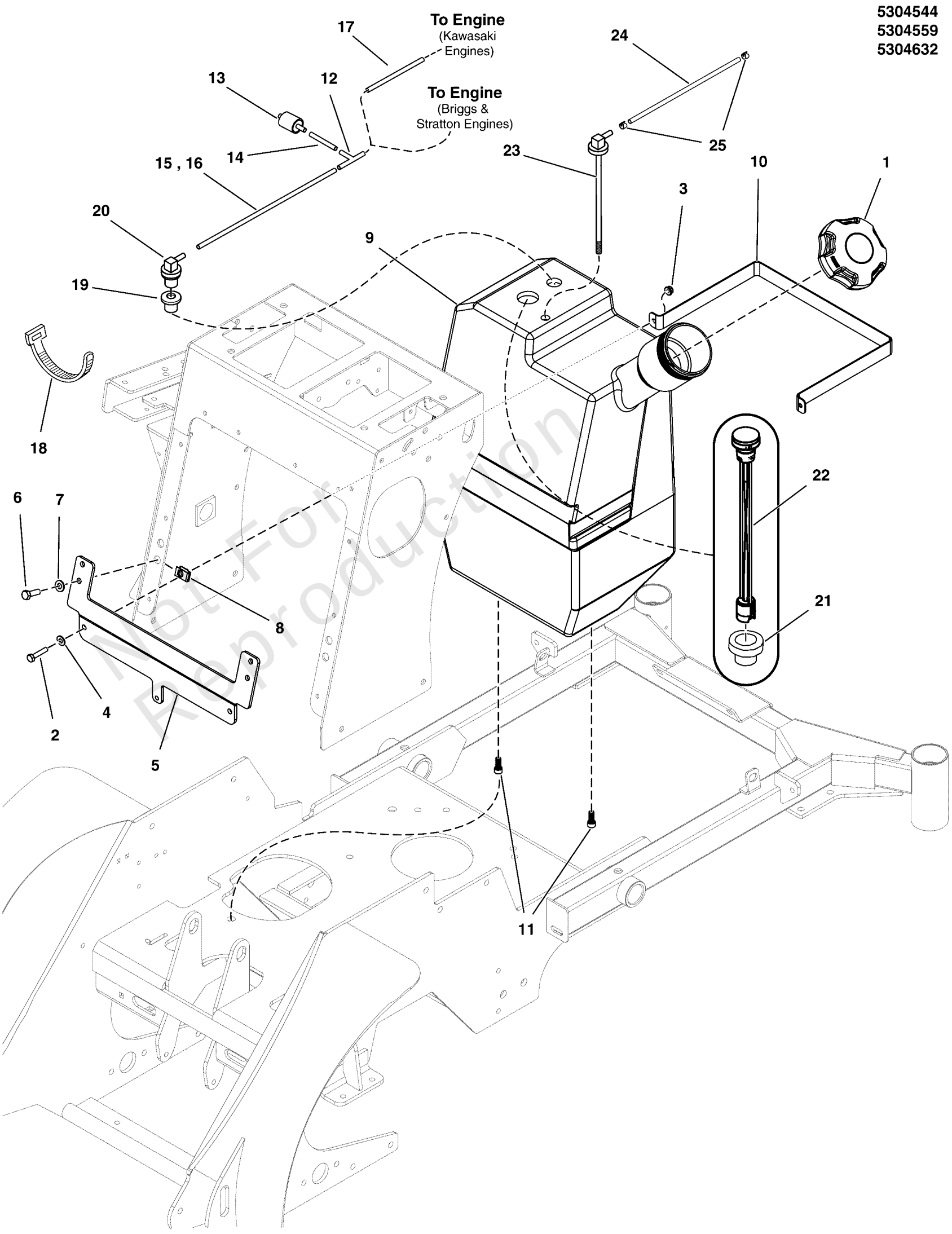

Not For Reproduction

Copyright © Briggs & Stratton. All Rights reserved

Fuel Tank & Mount, Fuel Supply, and Evap Group

REF NO	PART NO	QTY	DESCRIPTION
1	5104686	1	FUEL CAP, 3.25", MANAGED VENT, 16"TETHER
2	5025010X12	2	BOLT, 1/4-20 X 1-1/2 GD5 CZ
3	5025391	2	NUT, 1/4-20 HEX NYLOCK FLANGE
4	5025154	2	WASHER, 1/4 SAE
5	5414239AA	1	PLATE, TANK MOUNT, SRSZ1 - BLK
6	5025011X8	4	BOLT, 5/16-18 X 1 GD5 CZ
7	5025155	4	WASHER, 5/16" SAE
8	5022308	4	BODY CLIP, 5/16-18-7GA MATERIAL
9	5104926	1	FUEL TANK, SRSZ1, 6 GAL
10	541424AA	1	STRAP, FUEL TANK, SRSZ1 - BLK
11	84008512	2	SCREW, SOC HD, 5/16-18 X 1/2
12	5103062	1	FITTING, 3/16" TEE, BARB TYPE, HDPE
13	80025019	1	FILTER, FUEL
14	7700552X2	1	HOSE, VAPOR, 5MM ID, 2.00 LG
15	7700552X22	1	HOSE, VAPOR, 5MM ID, 22.00 LG -(Kawasaki Engines)
16	7700552X25	1	HOSE, VAPOR, 5MM ID, 25.00 LG -(Briggs & Stratton Engines)
17	7700552X14	1	HOSE, VAPOR, 5MM ID, 14.00 LG -(Kawasaki Engines)
18	5021030	2	TIE,SELF-LOCKING, 6" -(Qty: 1 - Briggs & Stratton Engines)
19	209043	1	GROMMET -(SV)
20	770046	1	REMOTE VENT ASSEMBLY -(SV)
21	80089102	1	GROMMET, FUEL GAUGE -(SV)
22	5104993	1	GAUGE, FUEL LEVEL, 18.50" -(SV)
23	5104994	1	ASM, PICKUP TUBE, FUEL TANK, 18.00" -(SV)
24	5050831X15P5	1	HOSE, 1/4" FUEL, 15.50"
25	93807	2	CLAMP, HOSE, EXTERNAL, 1/2 - RED

Not For Reproduction

Copyright © Briggs & Stratton. All Rights reserved

Hydraulic Group

Note: Unless noted otherwise, use the standard torque specifications

Mfg. No: 5901675

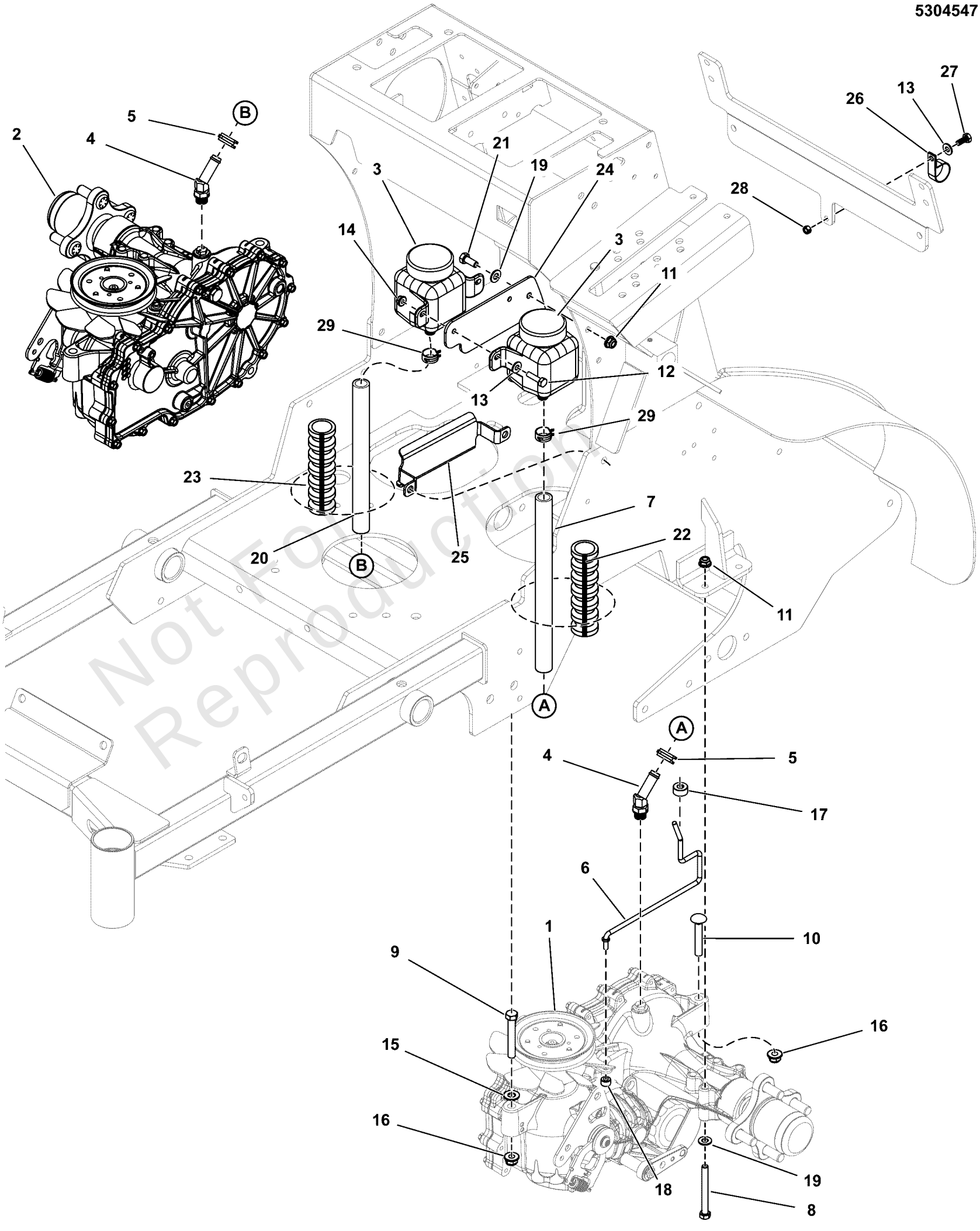

Not For Reproduction

Hydraulic Group

REF NO	PART NO	QTY	DESCRIPTION
1	5106326	1	TRANSAXLE, ZT3400, LH, ZU-KMEF-3L7C-1SXE -(S/N: 40015467047 and below)
1	84008569	1	TRANSAXLE (ZT-3400, LH,ZU-KMEF-SLKC-1SXX) -(S/N: 40015467048 and above)
2	5106327	1	TRANSAXLE, ZT3400, RH, ZU-GMEF-3L7B-1SXE -(S/N: 40015467047 and below)
1	84008570	1	TRANSAXLE (ZT-3400, RH,ZU-GMEF-SLKB-1SXX) -(S/N: 40015467048 and above)
3	5100473	2	RESERVOIR, HYDRO OIL, 350 ML
4	5102054	2	FITTING, 45 ELBOW, 1/2" HOSE TO 9/16 O R
5	5021392	2	CLAMP, #6 HOSE, STAINLESS
6	5104598	2	ROD, HYDRO RELEASE, STAND ON
7	5050857X26	1	HOSE, 1/2" PUSH-ON, 26.00"
8	5025011X24	4	BOLT, 5/16-18 X 3" GD5 YZ -(Torque transmission mounting bolt to 17-22 ft-lbs (23-30 Nm)
9	5025013X20	2	BOLT, 3/8-16 X 2-1/2" GD5 CZ -(Torque transmission mounting bolt to 30-35 ft-lbs (41-47 Nm)
10	7900009	2	RHSSNB, 3/8-16 X 2-1/4, GR5 -(Torque transmission mounting bolt to 30-35 ft-lbs (41-47 Nm)
11	5025392	6	NUT, 5/16-18 HEX NYLOCK FLANGE NUT
12	5025010X8	2	BOLT, 1/4-20 X 1" GD5 CZ
13	5025154	3	WASHER, 1/4 SAE
14	5025391	2	NUT, 1/4-20 Hex Nylock Flange
15	5025156	2	WASHER, 3/8 SAE
16	5025394	4	NUT, 3/8 - 16 HEX NYLOCK FLANGE
17	5020047	2	COLLAR, 5/16" Set
18	5022481	2	COLLAR, Set, 1/4"
19	5025155	6	WASHER, 5/16" SAE
20	5050857X33	1	HOSE, 1/2" PUSH-ON, 33.00"
21	5025011X6	2	BOLT, 5/16-18 X 3/4 GD5
22	5100384X8	1	LOOM, CONVOLUTED SPLIT, 1" ID - 8" LONG
23	5100384X16	1	LOOM, CONVOLUTED SPLIT, 1" ID - 16" LONG
24	5417081B	1	PLATE, HYDRO BOTTLE MOUNT, SRS Z1 - RED
25	5415170A	1	PLATE, HOSE GUIDE
26	5021500	1	CLAMP, VINYL INSULATED, 1.00
27	-----	1	HHCS, 1/4-20 X 0.625, GR5, ZINC/CLEAR
28	5025287	1	NUT, Hex, Side Locking, 1/4-20
29	5025474	2	CLAMP, HOSE, .75 FREE DIA.

Not For Reproduction

Copyright © Briggs & Stratton. All Rights reserved

Instrument Control Panel Group

Note: Unless noted otherwise, use the standard torque specifications

Mfg. No: 5901675

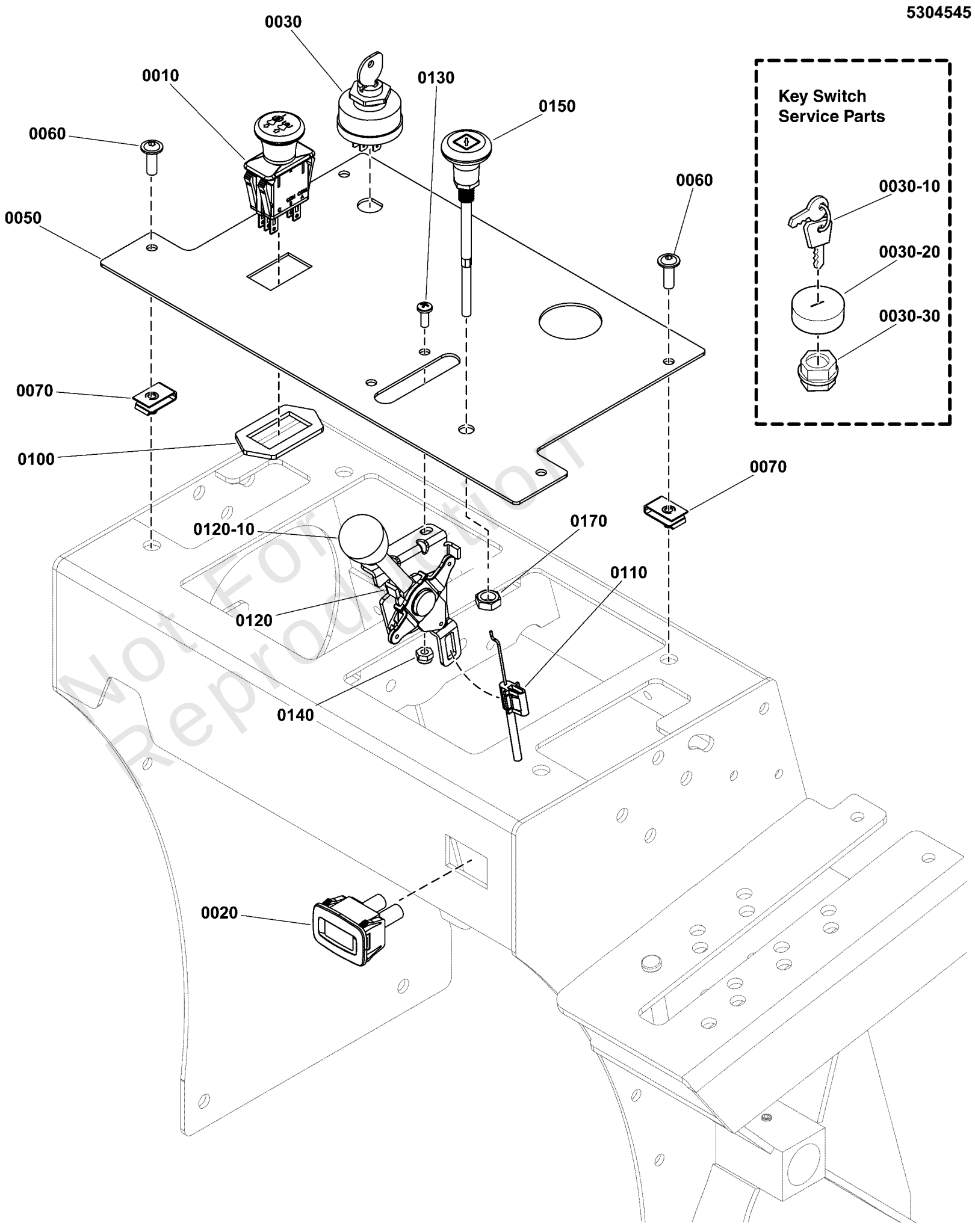

Not For Reproduction

Instrument Control Panel Group

REF NO	PART NO	QTY	DESCRIPTION
0010	5104697	1	PTO SWITCH, MOMENTARY, SMALL KNOB
0020	84008510	1	HOURMETER
0030	5020927	1	SWITCH, IGNITION, 6 POST
0030-10	5022789	1	KEY, IGNITION MOLDED SET
0030-20	5022790	1	COVER, PLASTIC, SNAP ON
0030-30	5022791	1	PLASTIC NUT
0050	5601073	1	DASH PANEL, W/DECALS, SRS Z1 USA -(5415380A)(For USA Models)
0050	5601074	1	DASH PANEL, W/DECALS, SRS Z1, EXP -(5415380A)(For Export Models)
0060	5106757	4	SCREW, FLANGE, ALLEN HD, 1/4-20 X .75 SS
0070	5022665	4	BODY CLIP, 1/4-20 X 1/2" DEEP
0100	5022222	1	RING, SWITCH RETAINER
0110	5101074	1	CABLE, THROTTLE, 40"
0120	5101995	1	LEVER, HEAVY DUTY, THROTTLE CONTROL
0120-10	5046360X1SM	1	KNOB, THROTTLE CONTRO
0130	5025179X4	2	SCREW, #10-24 X 1/2" ROUND PHILLIPS -(USA Models Only)
0130	5025179X6	2	SCREW, #10-24 X 3/4" ROUND PHILLIPS -(CE Models Only)
0140	5025271	2	NUT, Hex, Nylon Lock, #10-24
0150	5100184	1	CABLE, CHOKE CONTROL, 43.5"
0170	5025309	1	NUT, 3/8-24 Hex Jam
0190	-----	1	PLATE, Throttle Stop -(CE Models Only)

Not For Reproduction

Copyright © Briggs & Stratton. All Rights reserved

Main Frame & Front Casters Group

Note: Unless noted otherwise, use the standard torque specifications

Mfg. No: 5901675

5304543
5304564

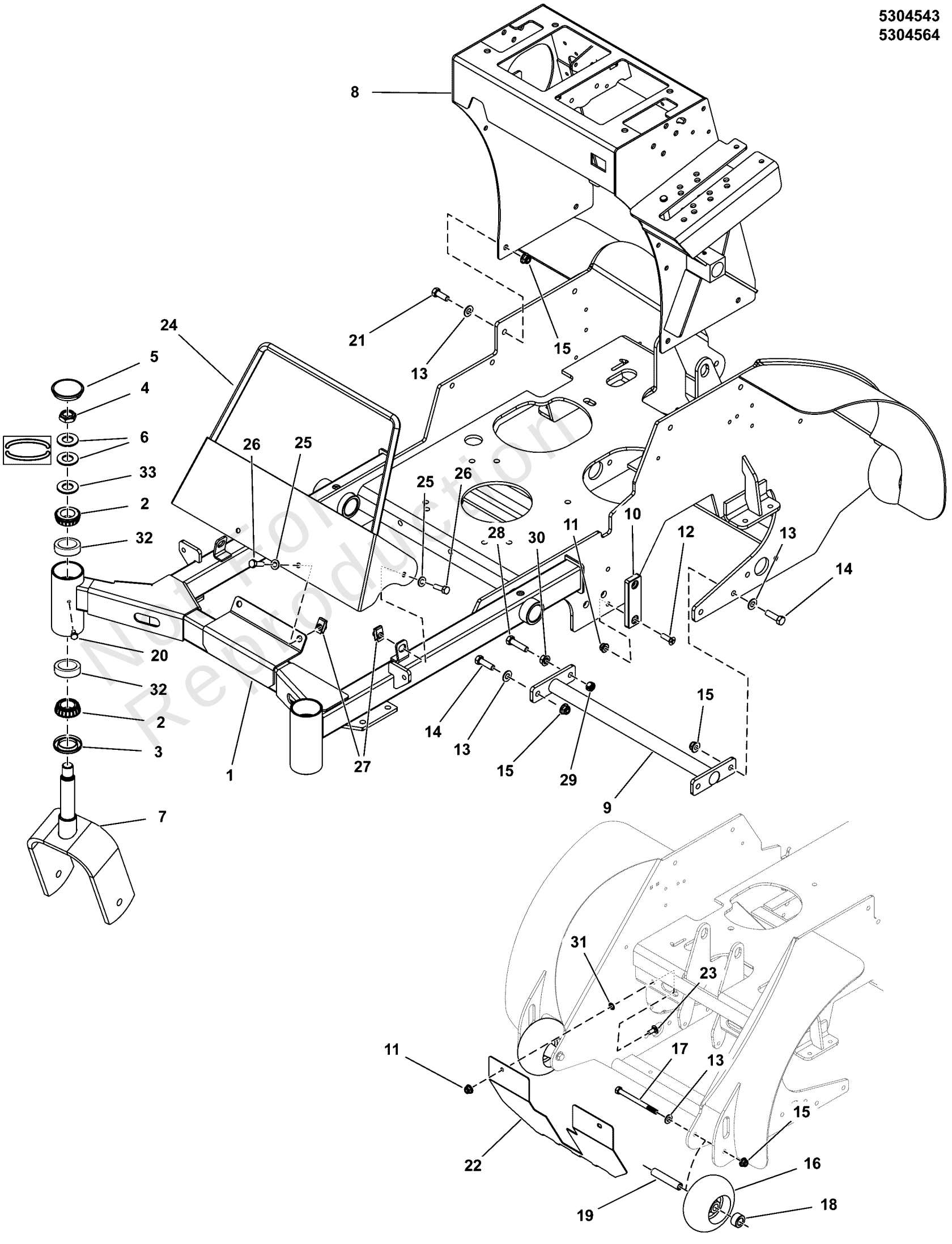

Not for Reproduction

Main Frame & Front Casters Group

REF NO	PART NO	QTY	DESCRIPTION
1	-----	1	FRAME -(Refer to Note: *)
2	5020884	4	BEARING, TAPERED ROLLER, 1"
3	5021072	2	SEAL, GREASE
4	5025448	2	NUT, 3/4-16, HEX JAM NYLON LOCK
5	5109845	2	CAP, GREASE, LOW PROFILE
6	5025449	4	WASHER, BELLEVILLE - 1.500 X .755
7	5402539B	2	WELD, CASTER YOKE - RED
8	5414222B	1	WELD, CONTROL TOWER, SRSZ1 - RED
9	5414237A	1	WELD, CENTER CROSS BRACE, SRSZ1 - BLK
10	5102702	2	PAD, FRICTION, .375 X 1.25 X 4.00
11	5025392	6	NUT, 5/16-18 HEX NYLOCK FLANGE NUT
12	5025594	4	SCREW, 5/16-18 X 1, PHILLIPS HD, BZ
13	5025156	9	WASHER, 3/8 SAE
14	5025013X10	3	BOLT, 3/8-16 X 1-1/4" GD5 CZ
15	5025394	9	NUT, 3/8 - 16 HEX NYLOCK FLANGE
16	1716353	2	GAUGE WHEEL-2.70 -(S/N: 2017954955 & Below)
16	5105521	2	WHEEL, ANTI SCALP, 5" -(S/N: 2017954956 & Above)
17	5025013X36	2	BOLT, 3/8-16 X 4-1/2" GD5 CZ
18	5100836	2	SPACER, .64 X 1.13 X .63, CZ -(S/N: 2017954955 & Below)
19	5101163	2	SPACER, .38 X .63 X 3.25, YZ -(S/N: 2017954955 & Below)
19	5105554	2	SPACER, .38 X .63 X 3.38, CZ -(S/N: 2017954956 & Above)
20	5025457	2	BOLT, 1/4-28 X 1/2, GD5 YZ
21	5025013X8	4	BOLT, 3/8-16 X 1" GD5 CZ
22	5415049B	1	PLATE, HEAT SHIELD, SRSZ1 - RED
23	5025145X6	2	BOLT, 5/16-18 X 3/4, CARRIAGE, GD5, CZ
24	5415217B	1	WELD, FRONT FRAME GUARD, SRSZ1 - RED
25	5025155	4	WASHER, 5/16" SAE
26	5025011X6	4	BOLT, 5/16-18 X 3/4 GD5
27	5022308	4	BODY CLIP, 5/16-18-7GA MATERIAL
28	5025013X12	1	BOLT, 3/8-16 X 1-1/2" GD5 CZ
29	5025100	1	NUT, Hex, Side Lock, 3/8-16
30	5025128	1	NUT, 3/8-16 Hex Large Serrated Flange
31	5025498	2	5/16" PUSH-ON NUT RETAINER, STL, CZ
32	5020883	4	CUP, BEARING (SV) -(Service Part for frame)
33	5025160	2	WASHER, 3/4 SAE

Not For Reproduction

Footnotes:

Note: *If frame is damaged, call 1-800-933-6175 ext. 709

Copyright © Briggs & Stratton. All Rights reserved

Motion Control Group

Note: Unless noted otherwise, use the standard torque specifications

Mfg. No: 5901675

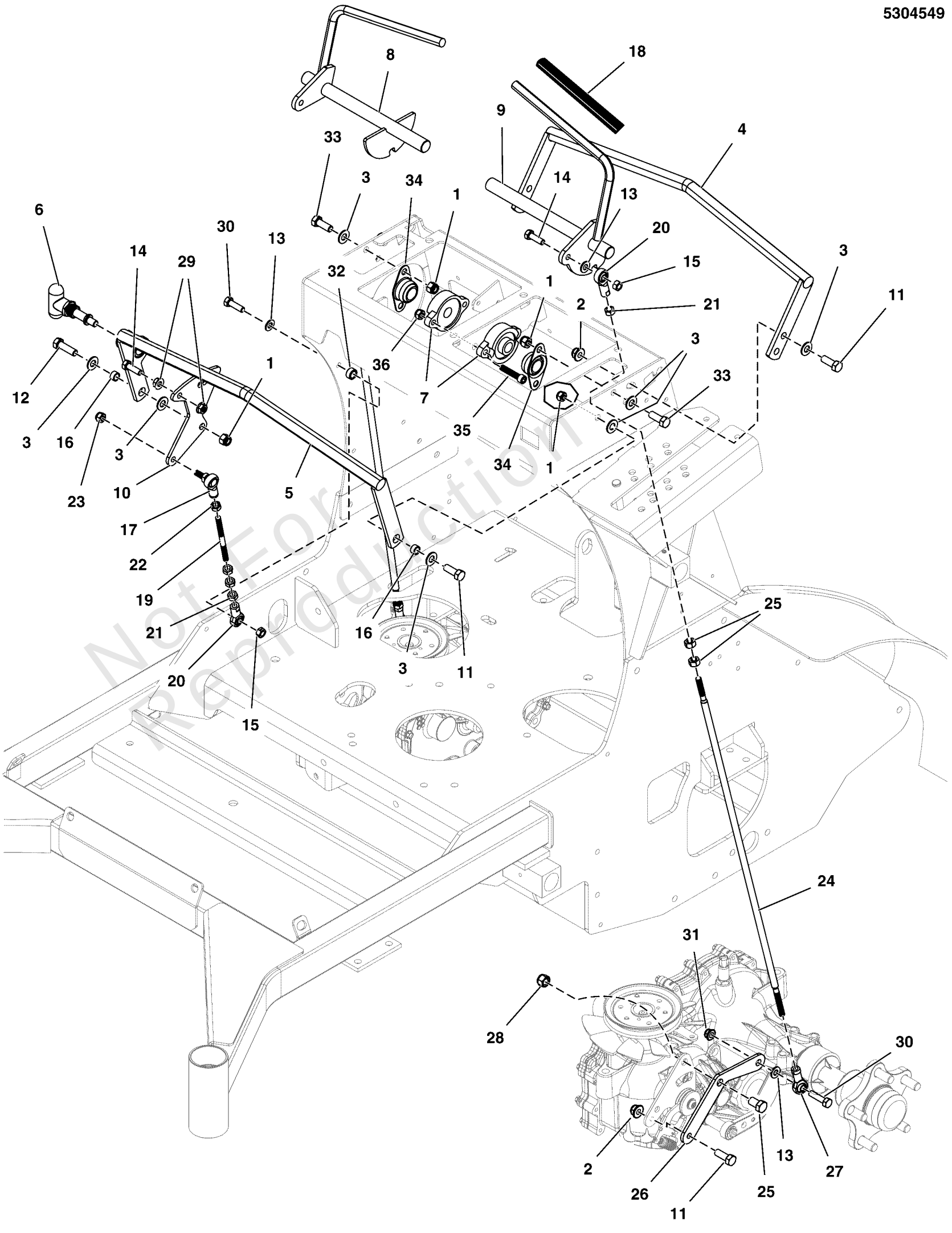

Not For Reproduction

Copyright © Briggs & Stratton. All Rights reserved

Motion Control Group

REF NO	PART NO	QTY	DESCRIPTION
1	5025096	10	NUT, 3/8-16 HEX NYLON LOCK
2	5025394	2	NUT, 3/8-16 HEX NYLOCK FLANGE
3	5025156	12	WASHER, 3/8 SAE
4	5414243A	1	WELD, REAR HANDLE, SRSZ1 - BLK
5	5414245A	1	WELD, FRONT HANDLE, SRSZ1 - BLK
6	5104609	1	PULL PIN, 3/8" DIA X 9/16" STROKE
7	5022846	2	BEARING-FLANGE, 5/8
8	5414246A	1	WELD, CONTROL HANDLE, SRSZ1 RH - BLK
9	5414247A	1	WELD, CONTROL HANDLE, SRSZ1 LH - BLK
10	5415643A	1	PLATE, SPEED ADJUSTMENT, SRS - BLK
11	5025013X8	7	BOLT, 3/8-16 X 1" GD5 CZ
12	5025013X10	1	BOLT, 3/8-16 X 1-1/4" GD5 CZ
13	5025155	5	WASHER, 5/16" SAE
14	5025011X8	3	BOLT, 5/16-18 X 1 GD5 CZ
15	80003675	3	NUT, 5/16-18, HEX, CNTR LK,ZINC PHOS/OIL
16	5041930	2	SPACER, .38 X .50 X .27, CZ
17	5104495	1	BALL JOINT 5/16-24 LH FEMALE W/STUD, BR
18	5100619	2	GRIP, FOAM, .475 X 7.75 X .095
19	5104608	1	ROD, 5/16-24 X 4.25, CZ
20	5104493	3	BALL JOINT 5/16-24 RH FEMALE BRONZE RACE
21	5025033	9	NUT, 5/16-24 HEX
22	5023212	1	NUT, 5/16-24 HEX, LH
23	5025045	1	NUT, 5/16-24 HEX NYLON LOCK
24	5104551	2	ROD, MOTION CONTROL, STAND-ON
25	5025015X6	2	BOLT, 7/16-14 X 3/4, GD 5 CZ
26	5413628A	2	PLATE, CONTROL MOUNT - BLK
27	5104494	2	BALL JOINT 5/16-24 LH FEMALE BRONZE RACE
28	5025044	2	NUT, 7/16-14 HEX TOP LOCK
29	5025127	2	NUT, 5/16-18 HEX SERRATED FLANGE (SMALL)
30	5025011X10	3	BOLT, 5/16-18 X 1-1/4 GD5 CZ
31	5025392	2	NUT, 5/16-18 HEX NYLOCK FLANGE
32	5102463	1	SPACER, .33 X .50 X .25, PM, CZ
33	5025013X6	4	BOLT, 3/8-16 X 3/4" GD5 CZ
34	5104885	2	BEARING, BRONZE, FLANGED, 5/8", FLB10
35	5025618X12	2	SCREW, SOC HD, 5/16-18 X 1-1/2, BLK
36	5025057	2	NUT, 5/16-18 HEX NYLON LOCK

Not For Reproduction

Copyright © Briggs & Stratton. All Rights reserved

Neutral Lockout Group

Note: Unless noted otherwise, use the standard torque specifications

Mfg. No: 5901675

5304560

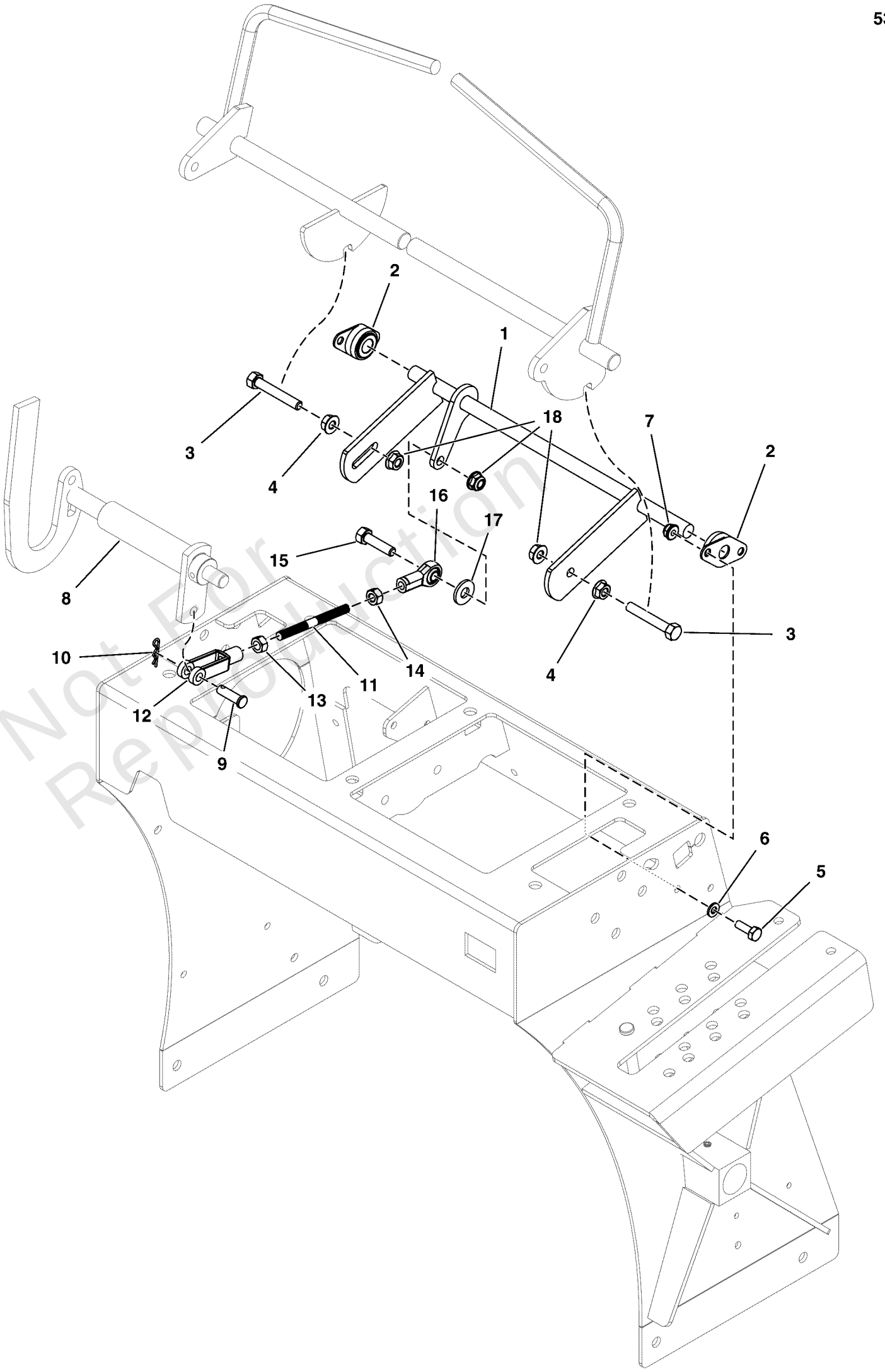

Not For Reproduction

Copyright © Briggs & Stratton. All Rights reserved

Neutral Lockout Group

REF NO	PART NO	QTY	DESCRIPTION
1	5414241A	1	WELD, NEUTRAL LOCK SHAFT, SRSZ1 - BLK
2	5101123	2	BEARING, 1/2 FLANGED, PLASTIC BALL
3	5025011X14	2	BOLT, 5/16-18 X 1-3/4 GD5 CZ
4	5025127	2	NUT, 5/16-18 HEX SERRATED FLANGE (SMALL)
5	5025010X6	4	BOLT, 1/4-20 X 3/4 GD5 CZ
6	5025154	4	WASHER, 1/4 SAE
7	5025391	4	NUT, 1/4-20 HEX NYLOCK FLANGE
8	-----	--	SEE PARKING BRAKE GROUP
9	5025213X8	1	PIN, CLEVIS, 5/16 X 1, PLATED
10	5025211	1	PIN, HAIR, .0585 X 1-1/8, 1/4 EYE, CZ
11	5104695	1	ROD, 5/16-24 X 3.25, CZ
12	5023323	1	CLEVIS, 5/16-24, STEEL, CLEAR ZINC
13	5025033	1	NUT, 5/16-24 HEX
14	5023212	1	NUT, 5/16-24 HEX, LH
15	5025011X10	1	BOLT, 5/16-18 X 1-1/4 GD5 CZ
16	5104494	1	BALL JOINT 5/16-24 LH FEMALE BRONZE RACE
17	5025337	1	WASHER, 5/16 USS
18	5025392	3	NUT, 5/16-18 HEX NYLOCK FLANGE

Not For Reproduction

Copyright © Briggs & Stratton. All Rights reserved

Operator Compartment Group S/N 2017954955 & Below

Note: Unless noted otherwise, use the standard torque specifications

Mfg. No: 5901675

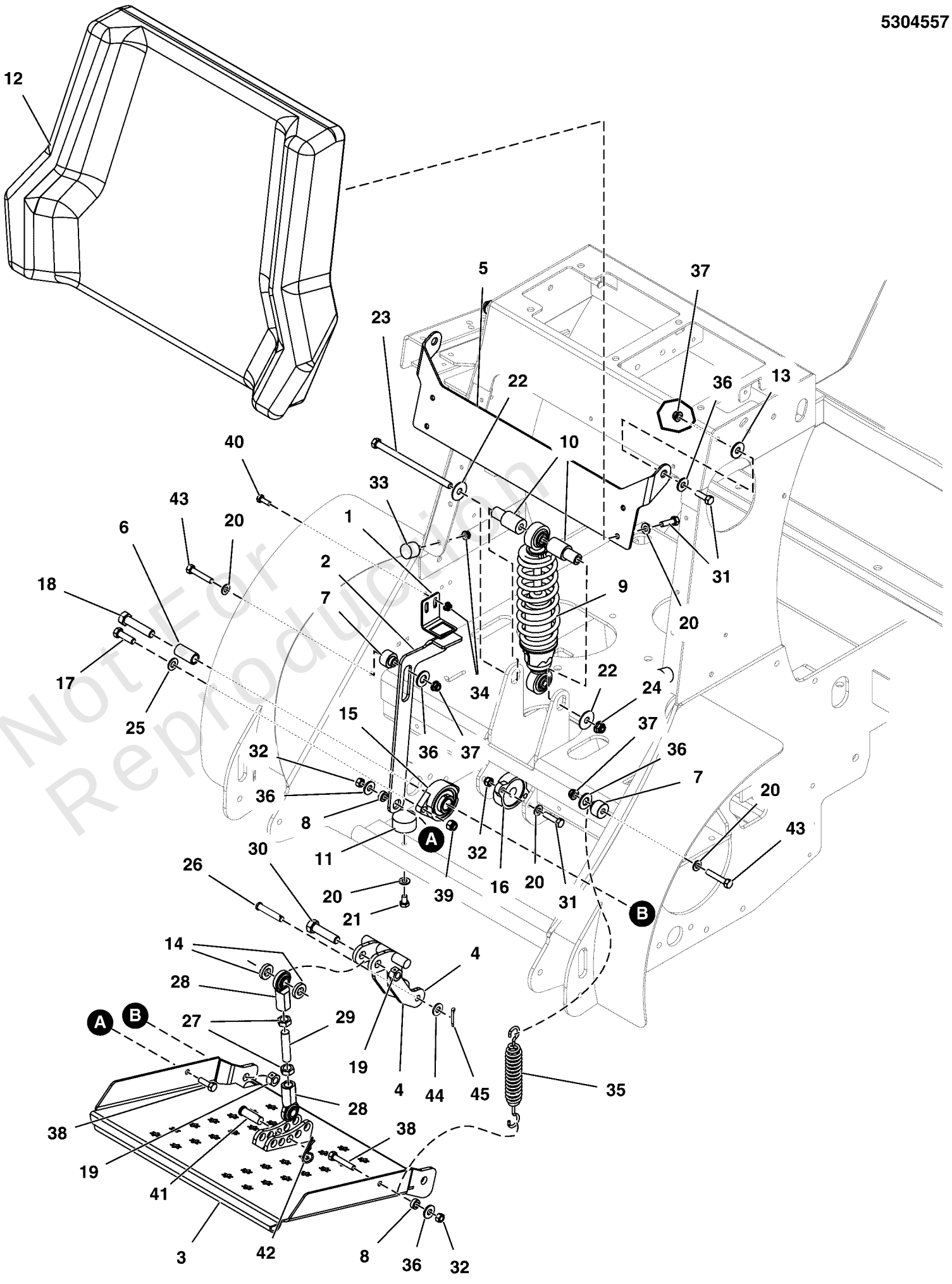

Not For Reproduction

Copyright © Briggs & Stratton. All Rights reserved

Operator Compartment Group S/N 2017954955 & Below

REF NO	PART NO	QTY	DESCRIPTION
1	5414289A	1	PLATE, OPC, STAND ON - BLK
2	5415381A	1	PLATE, OPC LINK, STAND ON - BLK
3	5414225A	1	WELD, PLATFORM, SRSZ1 - BLK
4	84008611	1	LINKAGE
5	5415658B	1	PLATE, PAD MOUNT, SRSZ1 - RED
6	5104658	2	SPACER, .52 X .74 X 1.50, CZ
7	5104655	2	SPACER, .328 X 1.0 X .85, CZ
8	5104654	2	SPACER, .33 X .63 X .25, CZ
9	5104640	1	SHOCK / SPRING ASSEMBLY
10	5104620	2	SPACER, STEP, .39 X 1.00 X .69, CZ
11	5104593	2	BUMPER, RUBBER
12	5104936	1	KNEE PAD, SRS Z1, STAND ON
13	5025164	2	WASHER, 5/16" Fender
14	5100520	2	SPACER, .52 X 1.00 X .22, PM, CZ
15	5021499	2	BEARING, FLANGE
16	5022846	2	BEARING-FLANGE, 5/8
17	5025013X10	4	BOLT, 3/8-16 X 1-1/4" GD5 CZ
18	5025017X18	2	BOLT, 1/2-13 X 2-1/4" GD5 CZ
19	5025332	3	NUT, 1/2-13 Hex Side Lock
20	5025155	12	WASHER, 5/16" SAE
21	5025011X6	2	BOLT, 5/16-18 X 3/4 GD5
22	5025165	2	WASHER, 3/8" Fender
23	5025013X44	1	BOLT, 3/8-16 X 5-1/2" GD5 CZ
24	5025394	1	NUT, 3/8 - 16 HEX NYLOCK FLANGE
25	5025156	4	WASHER, 3/8 SAE
26	84007981	1	PIN, Clevis
27	5025089	2	NUT, 1/2-20 Hex Jam
28	1702779	2	JOINT-BALL .500-20 THD .500ID, CLR ZINC
29	5104663	1	ROD, THREADED, 1/2-20 X 2.25
30	5025017X16	1	BOLT, 1/2-13 X 2" GD5 CZ
31	5025011X8	10	BOLT, 5/16-18 X 1" GRD5 YZ
32	80003675	6	NUT, 5/16-1/8, HEX, CNTR LK, ZINC PHOS/OIL
33	5022673	2	BUMPER, RUBBER, 1/4-20
34	5025391	4	NUT, 1/4-20 Hex Nylock Flange
35	5022847	1	SPRING-EXT, 1.04 ODX6.935LGX.148WR, BLK
36	5025337	6	WASHER, 5/16" USS
37	5025392	4	NUT, 5/16-18 HEX NYLOCK FLANGE NUT
38	1960086	2	SCREW, TRUSS HD TORX DR5/16-18X0.875 BLK
39	5025096	4	NUT, 3/8-16 HEX NYLON LOCK
40	80003518	2	BOLT,1/4-20X0.750,GR5,STD NECK,SQ,ZC/CL
41	5025328X12	1	PIN, CLEVIS, 1/2 X 1-1/2, PLATED
42	5025540	1	PIN, SURE LOCK COTTER, .09 X .75, CZ
43	5025011X14	2	BOLT, 5/16-18 X 1-3/4" GD5 YZ
44	5025293	1	WASHER, 3/8" GR. 9 FLAT
45	5025203X6	1	* PIN, COTTER, 1/8" X 3/4

Not For Reproduction

Copyright © Briggs & Stratton. All Rights reserved

Operator Compartment Group S/N 2017954956 & Above

Note: Unless noted otherwise, use the standard torque specifications

Mfg. No: 5901675

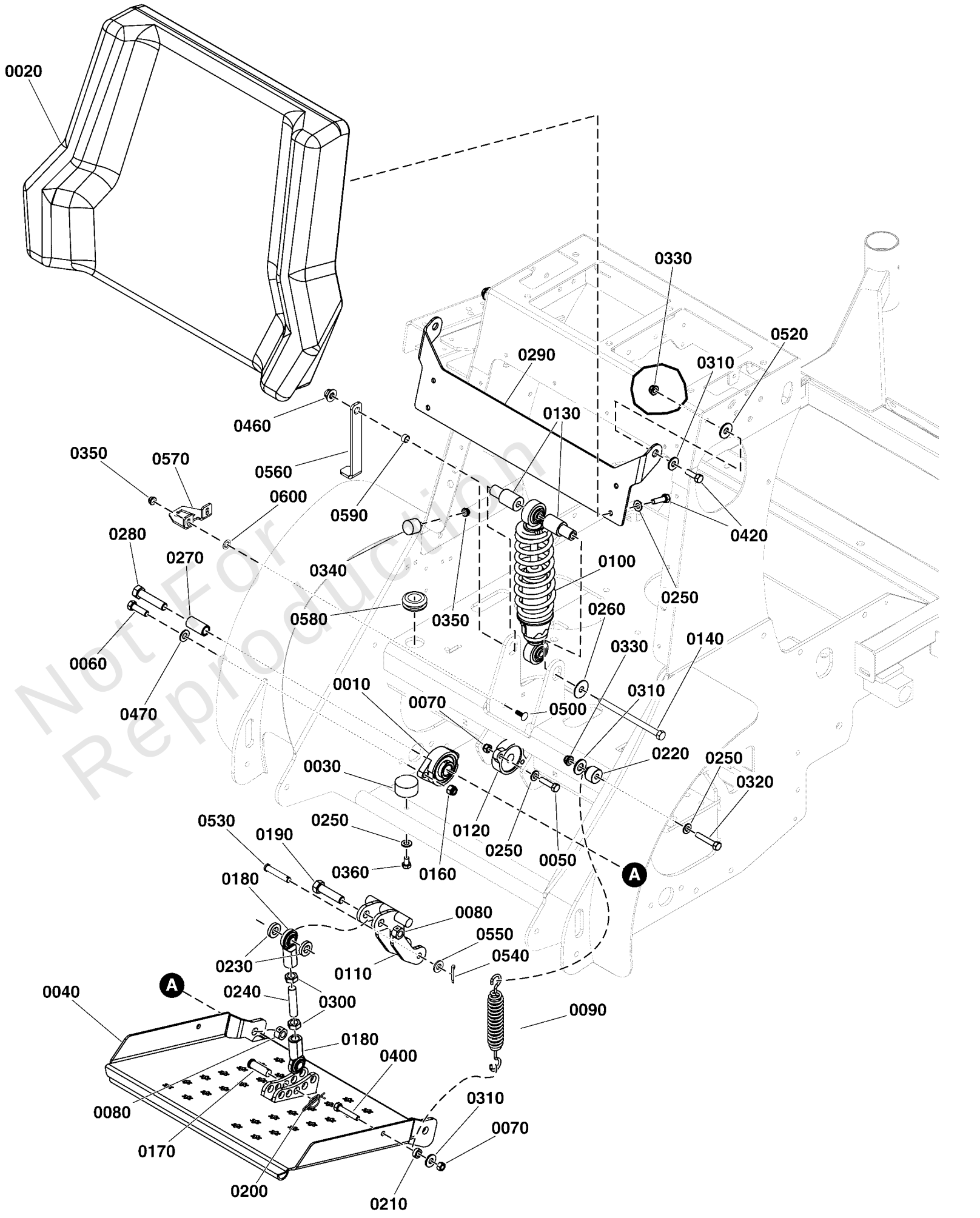

Not For Reproduction

Copyright © Briggs & Stratton. All Rights reserved

Operator Compartment Group S/N 2017954956 & Above

REF NO	PART NO	QTY	DESCRIPTION
0010	5021499	2	BEARING, FLANGE
0020	5104936	1	KNEE PAD, SRS Z1, STAND ON -(S/N: 4000875836 and below)
0020	5108193	1	KNEE PAD, SRSZ1, STAND ON -(S/N: 4000875837 and above)
0030	5104593	2	BUMPER, RUBBER
0040	5414225A	1	WELD, PLATFORM, SRSZ1 - BLK
0050	5025011X8	4	BOLT, 5/16-18 X 1" GRD5 YZ
0060	5025013X10	4	BOLT, 3/8-16 X 1-1/4" GD5 CZ
0070	80003675	5	NUT, 5/16-1/8, HEX, CNTR LK, ZINC PHOS/OIL
0080	5025332	3	NUT, 1/2-13 Hex Side Lock
0090	5022847	1	SPRING-EXT, 1.04 ODX6.935LGX.148WR, BLK
0100	5104640	1	SHOCK / SPRING ASSEMBLY
0110	84008611	1	LINKAGE
0120	5022846	2	BEARING-FLANGE, 5/8
0130	5104620	2	SPACER, STEP, .39 X 1.00 X .69, CZ
0140	5025013X44	1	BOLT, 3/8-16 X 5-1/2" GD5 CZ
0160	5025096	4	NUT, 3/8-16 HEX NYLON LOCK
0170	5025328X12	1	PIN, CLEVIS, 1/2 X 1-1/2, PLATED
0180	1702779	2	JOINT-BALL .500-20 THD .500ID, CLR ZINC
0190	5025017X16	1	BOLT, 1/2-13 X 2" GD5 CZ
0200	5025540	1	PIN, SURE LOCK COTTER, .09 X .75, CZ
0210	5104654	1	SPACER, .33 X .63 X .25, CZ
0220	5104655	1	SPACER, .328 X 1.0 X .85, CZ
0230	5100520	2	SPACER, .52 X 1.00 X .22, PM, CZ
0240	5104663	1	ROD, THREADED, 1/2-20 X 2.25
0250	5025155	12	WASHER, 5/16" SAE
0260	5025165	1	WASHER, 3/8" Fender
0270	5104658	2	SPACER, .52 X .74 X 1.50, CZ
0280	5025017X18	2	BOLT, 1/2-13 X 2-1/4" GD5 CZ
0290	5415658B	1	PLATE, PAD MOUNT, SRSZ1 - RED
0300	5025089	2	NUT, 1/2-20 Hex Jam
0310	5025337	4	WASHER, 5/16" USS
0320	5025011X14	1	BOLT, 5/16-18 X 1-3/4" GD5 YZ
0330	5025392	3	NUT, 5/16-18 HEX NYLOCK FLANGE NUT
0340	5022673	2	BUMPER, RUBBER, 1/4-20
0350	5025391	4	NUT, 1/4-20 Hex Nylock Flange
0360	5025011X6	2	BOLT, 5/16-18 X 3/4 GD5
0400	1960086	1	SCREW, TRUSS HD TORX DR5/16-18X0.875 BLK
0420	5025011X8	6	BOLT, 5/16-18 X 1" GRD5 YZ
0460	5025394	1	NUT, 3/8 - 16 HEX NYLOCK FLANGE
0470	5025156	4	WASHER, 3/8 SAE
0500	80003518	2	BOLT,1/4-20X0.750,GR5,STD NECK,SQ,ZC/CL
0520	5025164	2	WASHER, 5/16" Fender
0530	84007981	1	PIN, Clevis
0540	5025203X6	1	* PIN, COTTER, 1/8" X 3/4
0550	5025293	1	WASHER, 3/8" GR. 9 FLAT
0560	5107798	1	PLATE, LINK, OPC, SRSZ
0570	5105692	1	PLATE, SWITCH, OPC, SRSZ, CZ
0580	5103944	1	GROMMET, 7/8"ID, 1/4" THICK STK
0590	5041930	1	SPACER, .38 X .50 X .27, CZ
0600	80004801	2	BOLT,1/4,PUSHNUT RETAINER,PHOSPHATE/OIL

Not For Reproduction

Copyright © Briggs & Stratton. All Rights reserved

Parking Brake Group

Note: Unless noted otherwise, use the standard torque specifications

Mfg. No: 5901675

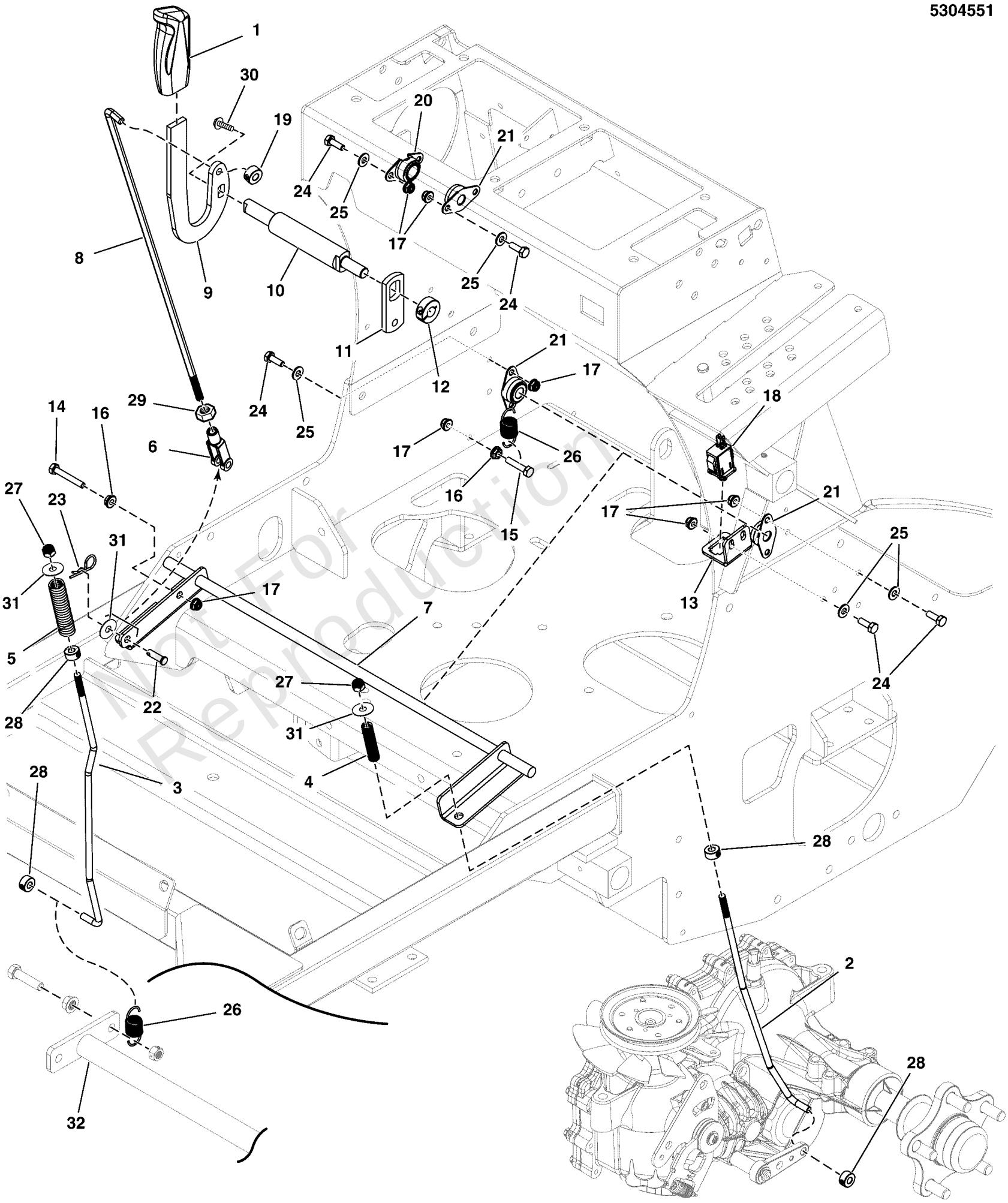

Not For Reproduction

Copyright © Briggs & Stratton. All Rights reserved

Parking Brake Group

REF NO	PART NO	QTY	DESCRIPTION
1	5100171	1	GRIP, BLACK FLEXIBLE
2	5104991	1	ROD, BRAKE CTRL, LOWER - LH
3	5104992	1	ROD, BRAKE CTRL, LOWER - RH
4	5020637	1	SPRING-COMP, .375IDX2.75LGX.054WR, SS
5	5023242	1	SPRING-COMP, .496ID X 3.00LG X .112WR
6	5023323	1	CLEVIS, 5/16-24, STEEL, CLEAR ZINC
7	5414231A	1	WELD, BRAKE SHAFT PIVOT - BLK
8	5104548	1	ROD, BRAKE, STAND-ON
9	5414538A	1	PLATE, BRAKE LEVER, SRSZ - BLK
10	5104953	1	SHAFT, UPPERBRAKE ROD SHORT, SRSZ1
11	5106314	1	PLATE, BRAKE TAB, STAND-ON
12	5010580	1	COLLAR, 1/2 SET (1/2 SPLIT COLLAR IN MODEL)
13	5415132A	1	PLATE, PARKING BRAKE SWITCH - BLK
14	5025010X12	1	BOLT, 1/4-20 X 1-1/2 GD5 CZ
15	5025010X10	1	BOLT, 1/4-20 X 1-1/4 GD5 CZ
16	5025126	2	NUT, 1/4-20 HEX SERR. FLANGE
17	5025391	12	NUT, 1/4-20 Hex Nylock Flange
18	-----	0	SEE ELECTRICAL GROUP
19	5020047	1	COLLAR, 5/16" Set
20	5104270	1	BEARING, 5/8" FLANGED, PLASTIC BALL
21	5101123	3	BEARING, 1/2 FLANGED, PLASTIC BALL
22	5025213X8	1	PIN, CLEVIS, 5/16 X 1, PLATED
23	5025211	1	PIN, HAIR, .0585 X 1-1/8, 1/4 EYE, YZ
24	5025010X6	10	BOLT, 1/4"-20 X 3/4" GD5 YZ
25	5025154	10	WASHER, 1/4 SAE
26	5010213	2	SPRING-EXT, .740 ODX2.025LGX.072WR, BLK
27	5025045	2	NUT, 5/16-24 HEX NYLON LOCK
28	5104748	4	COLLAR, DOUBLE SPLIT, 7MM
29	5025033	1	NUT, Hex, 5/16-24
30	2860664	1	SCREW-HEX SEMS WSHR 1/4-20 X.88 DOG PT
31	5025337	3	WASHER, 5/16" USS
32	-----	0	SEE MAIN FRAME GROUP

Not For Reproduction

Copyright © Briggs & Stratton. All Rights reserved

Spindle Service Parts - 5061096

Note: Unless noted otherwise, use the standard torque specifications

Mfg. No: 5901675

5061096

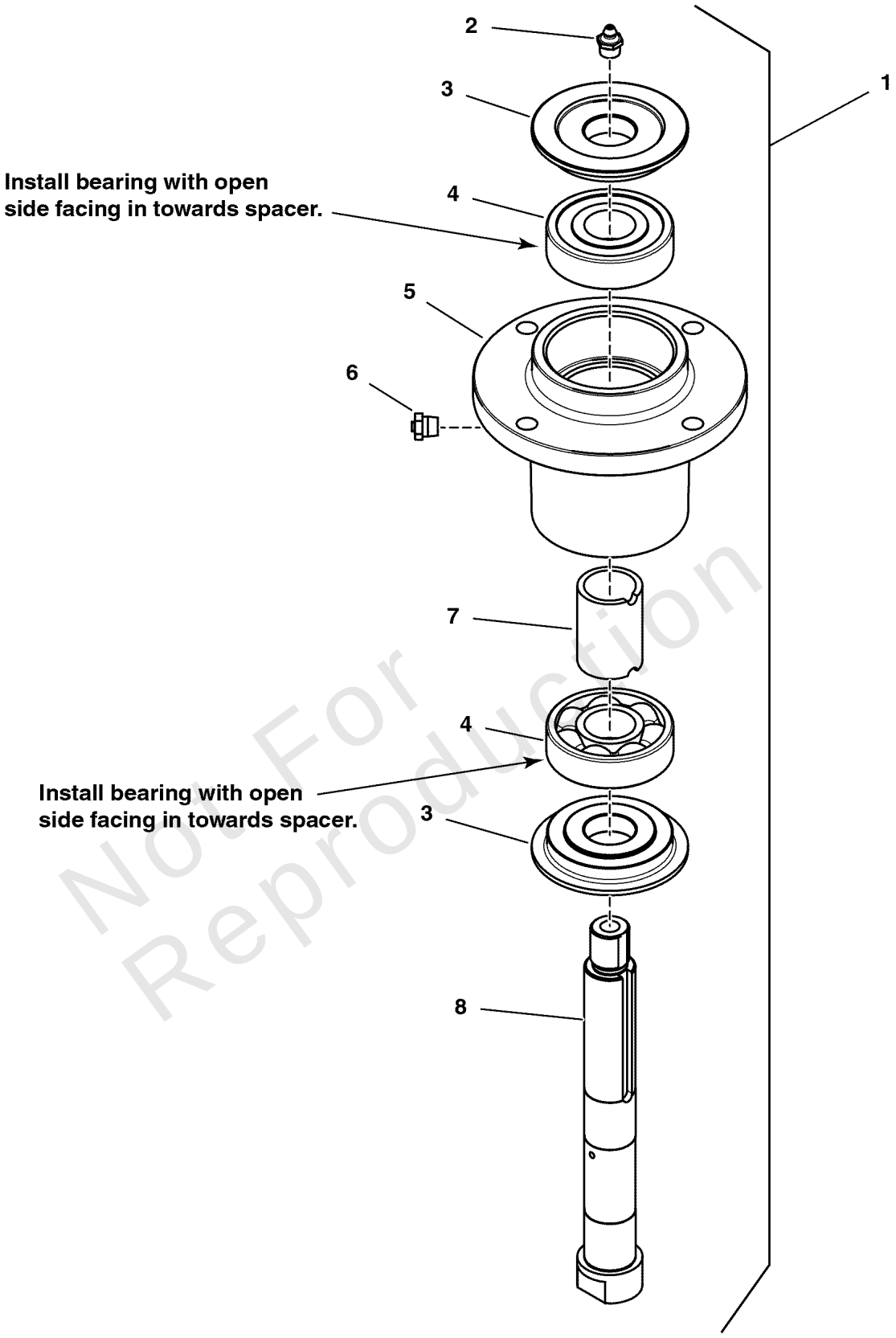

Not For Reproduction

Copyright © Briggs & Stratton. All Rights reserved

Spindle Service Parts - 5061096

REF NO	PART NO	QTY	DESCRIPTION
1	5061096	1	SPINDLE ASSM, ALUMINUM, LONG SHAFT -(*See Footnote)
2	5023329	1	FITTING, 1/8 NPT STR, SHORT -(SV)
3	5049793	2	TRASH SHIELD -(SV)
4	5023330	2	BEARING, .98 X 2.44 X .67 -(SV)
5	5061097	1	HOUSING, SPINDLE -(SV)
6	5023296	1	FITTING, RELIEF, 1-5 PSI -(SV)
7	5061099	1	SPACER, 1.00 X 1.25 X 1.75 -(SV)
8	5061100	1	SHAFT, SPINDLE -(SV)

Not For Reproduction

Footnotes:

(* Includes Items # 2 - 8)

Copyright © Briggs & Stratton. All Rights reserved

Transaxle Drive Group

Note: Unless noted otherwise, use the standard torque specifications

Mfg. No: 5901675

5304548

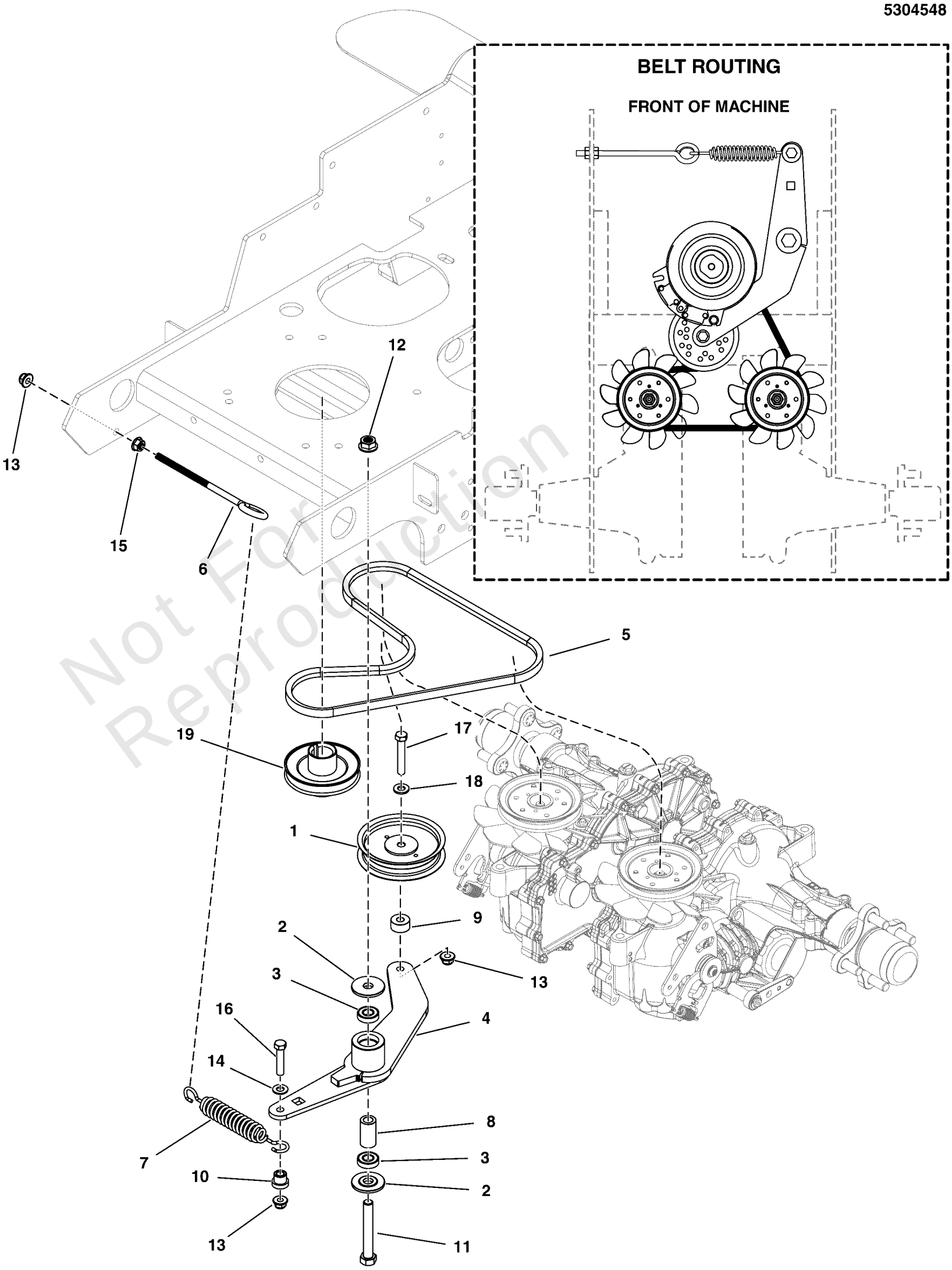

Not For Reproduction

Copyright © Briggs & Stratton. All Rights reserved

Transaxle Drive Group

REF NO	PART NO	QTY	DESCRIPTION
1	1725408	1	PULLEY-IDLER 04.00 OD 0.378ID 1.06 W BRG
2	5103262	2	SPACER, IDLER ARM, 1/2, PM
3	7078243	2	BEARING, BALL, AXLE
4	5416233AA	1	WELD, IDLER ARM, PUMP DRIVE - BLK
5	5104889	1	BELT, A-SEC, 50.5"EL, RAW EDGE, COG
6	5021812	1	EYE BOLT, 3/8-16 X 6, 3THRD, 1EYE, CZ
7	5022847	1	SPRING-EXT, 1.04 ODX6.935LGX.148WR, BLK
8	5103812	1	SPACER, .52 X .84 X 1.53, PM
9	5046860	1	SPACER, .39 X 1.00 X .50, PM, CZ
10	5023257	1	BUSHING, .38 X .88 X .73
11	5025017X28	1	BOLT, 1/2-13 X 3-1/2, HEX HD, GD5, CZ (SV)
12	5025396	1	NUT, Hex Flange, Nylock, 1/2-13
13	5025394	3	NUT, 3/8 - 16 HEX NYLOCK FLANGE
14	5025156	1	WASHER, 3/8 SAE
15	5025128	1	NUT, 3/8-16 Hex Large Serrated Flange
16	5025013X14	1	BOLT, 3/8-16 X 1-3/4" GD5 CZ
17	80003522	1	HHCS, 3/8-16 X 2.00, GR5, ZINC/CLEAR
18	5025293	1	WASHER, 3/8" GR. 9 FLAT
19	-----	1	PULLEY, CRANKSHAFT (SEE ENGINE & PTO GROUP)

Not For Reproduction

Copyright © Briggs & Stratton. All Rights reserved

Note: Unless noted otherwise, use the standard torque specifications

Mfg. No: 5901675

Service Parts Schematic for Hydro-Gear® Transaxles:
ZU-KMEF-3L7C-1SXX (5104821)
ZU-GMEF-3L7B-1SXX (5104822)

For components not listed see your authorized Hydro-Gear® service provider.

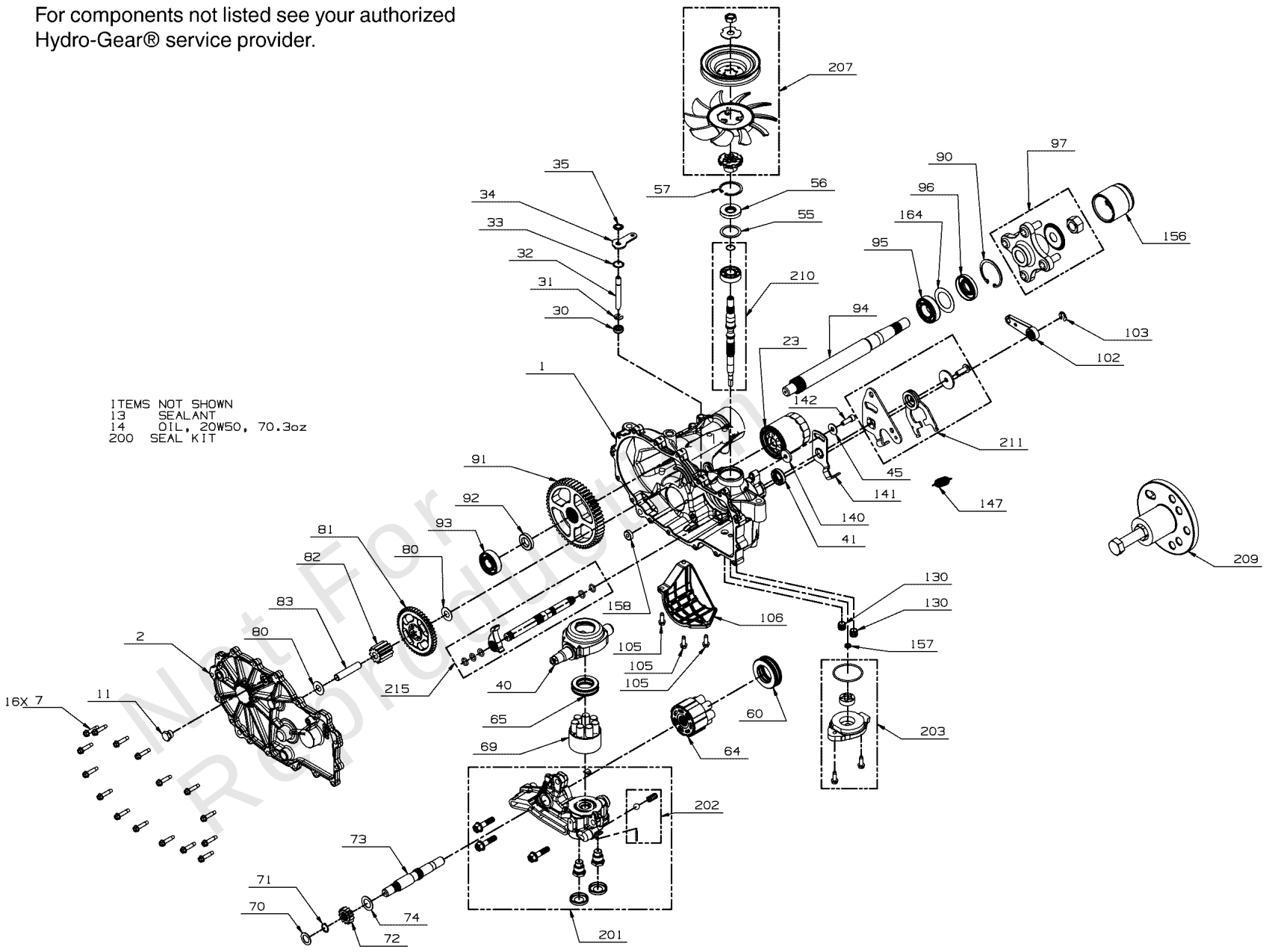

Not For Reproduction

Copyright © Briggs & Stratton. All Rights reserved

Transaxle SERVICE Parts - Hydro-Gear ZT3400

REF NO	PART NO	QTY	DESCRIPTION
13	5022902X1	1	SEALANT
23	5101026X1	1	FILTER, OIL, ZT2800
41	5101026X2	1	SEAL, CONTROL ARM, 18X32X7, #51140
56	5022905X16	1	SEAL, Lip, .67 x 1.58 x .276
57	5101026X4	1	RING, RET 2.06 INT,
93	5104822X1	1	KIT, BEARING, ZT-3400, 72749
94	5104822X2	1	SHAFT, AXLE, ZT-3400, 53528
95	5101026X5	1	BEARING BALL, 1.0 X 52 X 15 OPEN 6205M
96	5103589X1	1	KIT, SEAL, AXLE - HG# 53699
97	5103382	1	HUB, ASM, TRANS 5101188/89 & 5102154/55
102	5103750	1	BRAKE ARM, ZT3400
103	5104055	1	E-CLIP, BRAKE ARM, ZT3100 & ZT3400
156	5104822X3	1	CAP, AXLE, ZT-3400, 53501
200	5103589X2	1	KIT, SEAL - HG# 73239
203	5101026X12	1	KIT, CHARGE PUMP, ZT2800, ZT3100
207	5104822X4	1	KIT, FAN-PULLEY, ZT-3400, 72684
210	5103589X4	1	KIT, INPUT SHAFT (BEARING AND SHAFT ONLY)
1000	5104580X4	1	KIT, PLUG, BRAKE BORE, OUTBOARD

Not For Reproduction

Copyright © Briggs & Stratton. All Rights reserved

Front Wheels & Tires

5304553
5304566

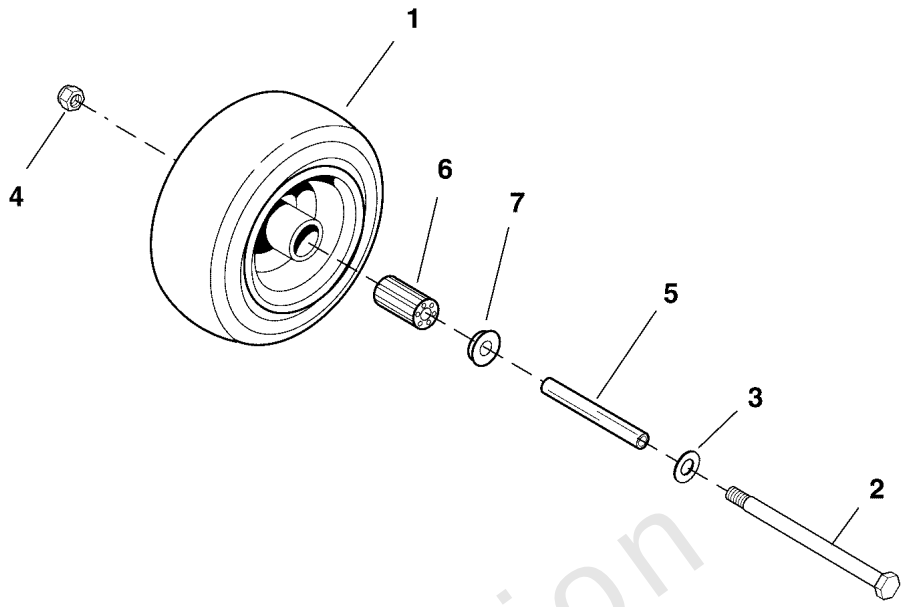

Flat Free Tire

Rear Wheels & Tires

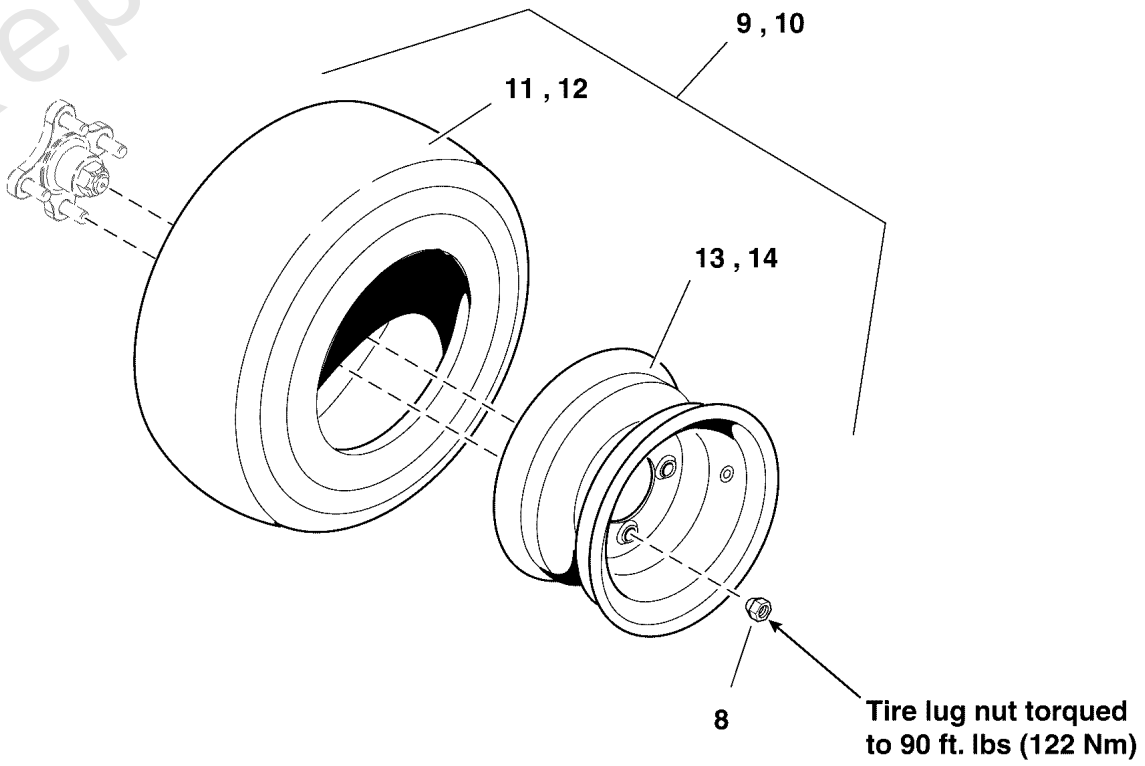

Inflate to 15 psi (1,03 bar)

Not For Reproduction

Wheel & Tire Group

REF NO	PART NO	QTY	DESCRIPTION
1	5100715	2	TIRE ASSM, 11 X 4 - 5, FF / CB
2	5025017X56	2	BOLT, 1/2-13 X 7 GD5 CZ
3	5025158	2	WASHER, 1/2 SAE
4	5025396	2	NUT, Hex Flange, Nylock, 1/2-13
5	5045996	2	CASTER AXLE DDSH
6	5101418X1	2	BEARING, ROLLER -(SV)
7	5021043	4	BEARING, RETAINER -(SV)
8	5020601	8	NUT, 1/2-20, FOR WHEEL BOLT SILVER
9	5104823	2	TIRE WHEEL ASM, 23 X 8.5-12, TURF MASTER -(36" Deck Models)
10	5104988	2	TIRE WHEEL ASM, 23 x 10.5-12, TURF SMART -(48" Deck Models - S/N: 4000771923 and below)
10	5108120	2	TIRE/WHEEL ASM, 23X10.5-12, TURF MASTER -(48" Deck Models - S/N: 4000771924 and above)
11	5104823X2	2	TIRE, 23 X 8.5-12NHS, TURF MASTER -(Service part for 5104823)
12	5103920X2	2	TIRE, 23 X 10.5-12NHS, TURF SMART -(Service part for 5104988)
12	84003895	2	TIRE (23 X 10.5 - 12) -(Service part for 5108120)
13	5104823X1	2	WHEEL, 12.0 X 7.0, 4/4.0", SILVER -(Service part for 5104823)
14	5104988X1	2	WHEEL ASM, 12 X 8.5-12, 1.87OS, SLVR -(Service part for 5104988 & 5108120)

Not For Reproduction

Copyright © Briggs & Stratton. All Rights reserved

Hardware Identification & Torque Specifications

Torque Specification Chart

FOR STANDARD METRIC MACHINE HARDWARE (Tolerance ± 20%)

Property Class	5.6 Class 5.6		8.8 Class 8.8		10.9 Class 10.9		12.9 Class 12.9	
Size Of Hardware	*in/lbs* **ft/lbs**	Nm.	*in/lbs* **ft/lbs**	Nm.	*in/lbs* **ft/lbs**	Nm.	*in/lbs* **ft/lbs**	Nm.
M3	*5.88*	*.56*	*13.44*	*1.28*	*19.2*	*1.80*	*22.92*	2.15
M4	*13.44*	*1.28*	*30.72*	*2.90*	*43.44*	*4.10*	*52.56*	4.95
M5	*26.4*	*2.50*	*60.96*	*5.75*	**5.97**	*8.10*	**7.15**	9.7
M6	*44.64*	*4.3*	**7.3**	*9.9*	**10.3**	*14*	**12.1**	16.5
M7	**5.2**	*7.1*	**12.1**	*16.5*	**16.9**	*23*	**19.9**	27
M8	**7.7**	*10.5*	**17.7**	*24*	**25**	*34*	**29**	40
M10	**15**	*21*	**35**	*48*	**50**	*67*	**59**	81
M12	**26**	*36*	**61**	*83*	**86.2**	*117*	**103**	140
M14	**42**	*58*	**101**	*132*	**136**	*185*	**162**	220
M16	**64**	*88*	**147**	*200*	**210**	*285*	**250**	340
M18	**89**	*121*	**202**	*275*	**287**	*390*	**346**	470
M20	**126**	*171*	**290**	*390*	**405**	*550*	**486**	660
M22	**169**	*230*	**390**	*530*	**559**	*745*	**656**	890
M24	**217**	*295*	**497**	*375*	**708**	*960*	**840**	1140
M27	**320**	*435*	**733**	*995*	**1032**	*1400*	**1239**	1680
M30	**435**	*590*	**995**	*1350*	**1401**	*1900*	**1681**	2280
M33	**590**	*800*	**1349**	*1830*	**1902**	*2580*	**2278**	3090
M36	**759**	*1030*	**1740**	*2360*	**2441**	*3310*	**2935**	3980
M39	**988**	*1340*	**2249**	*3050*	**3163**	*4290*	**3798**	5150

The guides and ruler furnished below are designed to help you select the appropriate hardware.

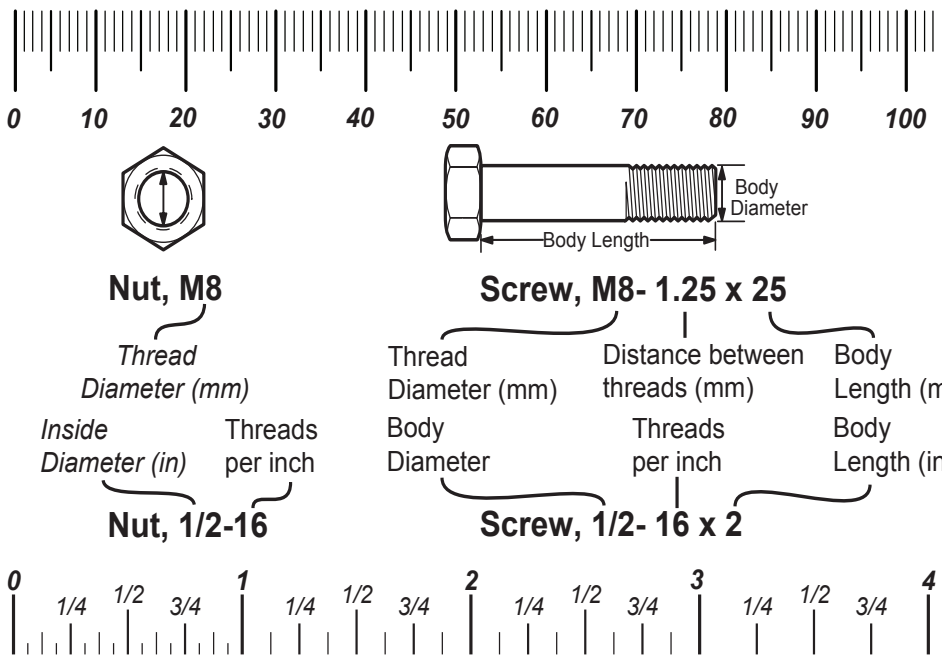

Standard Hardware Sizing

When a washer or nut is identified as **1/2"** (M8), this is the *Nominal size*, meaning the *inside diameter* is 1/2 inch (8mm metric thread diameter); if a second number is present it represents the *threads per inch* (distance between threads).

When bolt or capscrew is identified as **1/2 - 16 x 2"** (M8 - 1.25 x 50), this means the *Nominal size*, or body diameter is 1/2 inch (8mm metric thread diameter), the second number,16, represents the *threads per inch, (distance between threads).* The final number is the body length of the bolt or screw, 2 inches (50mm).

Torque Specification Chart

FOR STANDARD MACHINE HARDWARE (Tolerance ± 20%)

Hardware Grade	No Marks SAE Grade 2		SAE Grade 5		SAE Grade 8	
Size Of Hardware	*in/lbs* **ft/lbs**	Nm.	*in/lbs* **ft/lbs**	Nm.	*in/lbs* **ft/lbs**	Nm.
8-32	*19*	2.1	*30*	3.4	*41*	4.6
8-36	*20*	2.3	*31*	3.5	*43*	4.9
10-24	*27*	3.1	*43*	4.9	*60*	6.8
10-32	*31*	3.5	*49*	5.5	*68*	7.7
1/4-20	*66*	7.6	**8**	10.9	**12**	16.3
1/4-28	*76*	8.6	**10**	13.6	**14**	19.0
5/16-18	**11**	15.0	**17**	23.1	**25**	34.0
5/16-24	**12**	16.3	**19**	25.8	**29**	34.0
3/8-16	**20**	27.2	**30**	40.8	**45**	61.2
3/8-24	**23**	31.3	**35**	47.6	**50**	68.0
7/16-14	**30**	40.8	**50**	68.0	**70**	95.2
7/16-20	**35**	47.6	**55**	74.8	**80**	108.8
1/2-13	**50**	68.0	**75**	102.0	**110**	149.6
1/2-20	**55**	74.8	**90**	122.4	**120**	163.2
9/16-12	**65**	88.4	**110**	149.6	**150**	204.0
9/16-18	**75**	102.0	**120**	163.2	**170**	231.2
5/8-11	**90**	122.4	**150**	204.0	**220**	299.2
5/8-18	**100**	136	**180**	244.8	**240**	326.4
3/4-10	**160**	217.6	**260**	353.6	**386**	525.0
3/4-16	**180**	244.8	**300**	408.0	**420**	571.2
7/8-9	**140**	190.4	**400**	544.0	**600**	816.0
7/8-14	**155**	210.8	**440**	598.4	**660**	897.6
1-8	**220**	299.2	**580**	788.8	**900**	1,244.0
1-12	**240**	326.4	**640**	870.4	**1,000**	1,360.0

NOTES

1. These torque values are to be used for all hardware excluding: locknuts, self-tapping screws, thread forming screws, sheet metal screws and socket head setscrews.
2. Recommended seating torque values for locknuts:
   a. for prevailing torque locknuts - use 65% of grade 5 torques.
   b. for flange whizlock nuts and screws - use 135% of grade 5 torques.
3. Unless otherwise noted on assembly drawings, all torque values must meet this specification.

Common Hardware Types

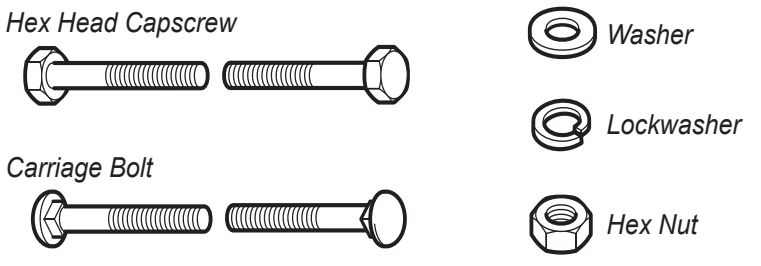

Wrench & Fastener Size Guide

1/4" Bolt or Nut Wrench—7/16"

5/16" Bolt or Nut Wrench—1/2"

3/8" Bolt or Nut Wrench—9/16"

7/16" Bolt or Nut Wrench (Bolt)—5/8" Wrench (Nut)—11/16"

1/2" Bolt or Nut Wrench—3/4"

M6 Bolt or Nut Wrench—10mm

M8 Bolt or Nut Wrench—13mm

M10 Bolt or Nut Wrench—17mm

M12 Bolt or Nut Wrench—19mm

M14 Bolt or Nut Wrench—22 mm

Copyright © Briggs & Stratton. All Rights reserved