Parts Manual

Mfg. No: 5901907

IS600Z Series w/ 48" Side Discharge Flat-Nosed Mower Deck (IS600ZBV2548)

Copyright © Briggs & Stratton. All Rights reserved

19-Apr-2024

5600031 - Kit, Trailer Hitch (IS600/IS700/IS2100/IS2600/IS5100/F160/F210). . . . . .
5600963 - Striping Kit, 44FN & 48 iCD Deck. . . . . .
5023280 - Flat Free Tire Assembly (13 X 5 - 6). . . . . .
5600778 - 48" iCD TURBO-Pro; 2-Bag Hard Top Grass Collection System (600). . . . . .
5600647 - Headlight Kit. . . . . .
5601096 - Mulch Kit for ZTR w/ 48" Flat Nosed Deck, IS600Z. . . . . .
5601078 - Service Jack Mount Kit (7.25"). . . . . .
5601080 - Service Jack Kit. . . . . .
5600085 - Striping Kit, 48FN & 52FN Deck. . . . . .

Not For Reproduction

Copyright © Briggs & Stratton. All Rights reserved

Model Components

	Page
48" Mower Deck Group - Hanger Chains	4
48" Mower Deck Group - Housing, Covers, Spindles & Blades	6
48" Mower Deck Group - Pulleys, Belt & Idler Arm	8
48" Mower Deck Group - Rollers	10
Decal Group - Brand and Model	12
Decal Group - Safety & Operation	14
Deck Lift Group	16
Electrical Group	18
Electrical Schematic - Charging Circuit B&S 44T977, 49T877	20
Electrical Schematic - Cranking Circuit B&S 44T977, 49T877	22
Electrical Schematic - Ign. Grounding Circuit/Op. Pres. B&S 44T977, 49T877	24
Electrical Schematic - PTO Clutch Circuit B&S 44T977, 49T877	26
Engine & PTO Group - Briggs & Stratton 44T977	28
Evap Group	30
Fuel Tank & Mount Group	32
Hydraulic Group	34
Instrument Control Panel Group	36
Main Frame & Front Suspension Group	38
Motion Control Group - Control System S/N: 4002340028 and Below	40
Motion Control Group - Handles & Dampeners	42
Parking Brake Group	44
Rear Bumper and ROPS Group - Models with Folding Roll Bars	46
Rear Suspension Group	48
Seat Mount & Floor Group S/N: 4000875837 to 4002340028	50
Spindle SERVICE PARTS - 5061095	52
Transaxle Drive Group	54
Transaxle SERVICE Parts - Hydro-Gear ZT3200	56
Wheel and Tire Group	60
Torque Specification Chart	62

Not For Reproduction

Copyright © Briggs & Stratton. All Rights reserved

48" Mower Deck Group - Hanger Chains

Note: Unless noted otherwise, use the standard torque specifications

Mfg. No: 5901907

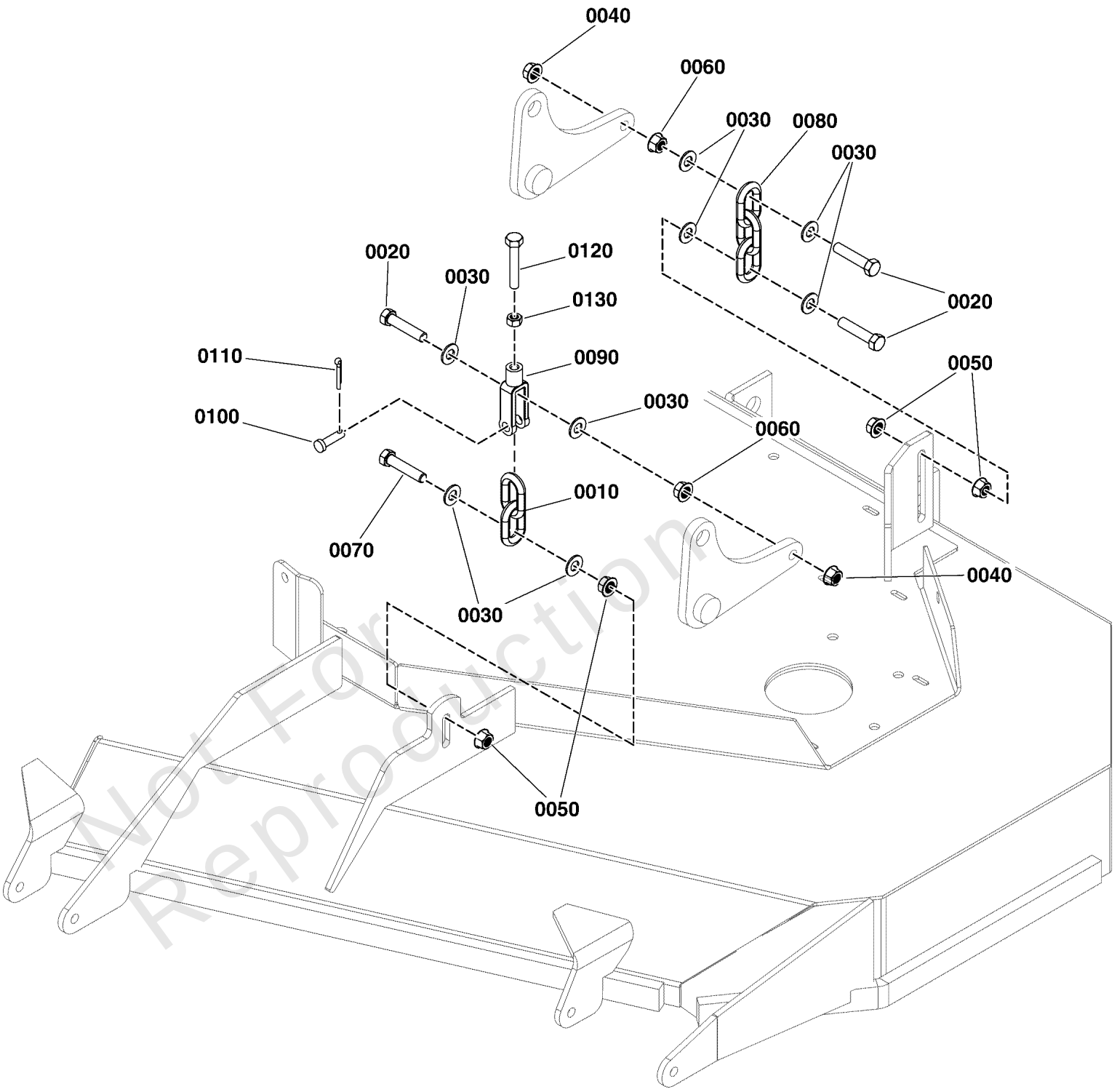

Not For Reproduction

Copyright © Briggs & Stratton. All Rights reserved

48" Mower Deck Group - Hanger Chains

REF NO	PART NO	QTY	DESCRIPTION
0010	5050878X2	2	HANGER, FRONT DECK - 2 LINK
0020	5025013X14	6	BOLT, 3/8-16 X 1-3/4" GD5 CZ
0030	5025156	16	WASHER, 3/8 SAE
0040	5025394	4	NUT, 3/8 - 16 HEX NYLOCK FLANGE
0050	5025128	8	NUT, 3/8-16 Hex Large Serrated Flange
0060	5025084	4	NUT, 3/8-16 HEX JAM
0070	5025013X16	2	BOLT, 3/8-16 X 2, GD5, CZ
0080	5050878X3	2	CHAIN, 5/16" GD30, 3 LINKS
0090	5100375	2	CLEVIS, 5/16-18, 3/8 PIN HOLE, CLR ZINC
0100	5025214X9	2	PIN, CLEVIS, 3/8 X 1-1/8, PLATED
0110	80002736	2	PIN, 3/32 X 0.750, COT, ZINC/CLEAR
0120	5025055X16	2	BOLT, 5/16-18 X 2 GD5 TFL, CZ
0130	5025032	2	NUT, 5/16-18 HEX

Not For Reproduction

Copyright © Briggs & Stratton. All Rights reserved

48" Mower Deck Group - Housing, Covers, Spindles & Blades

Note: Unless noted otherwise, use the standard torque specifications

Mfg. No: 5901907

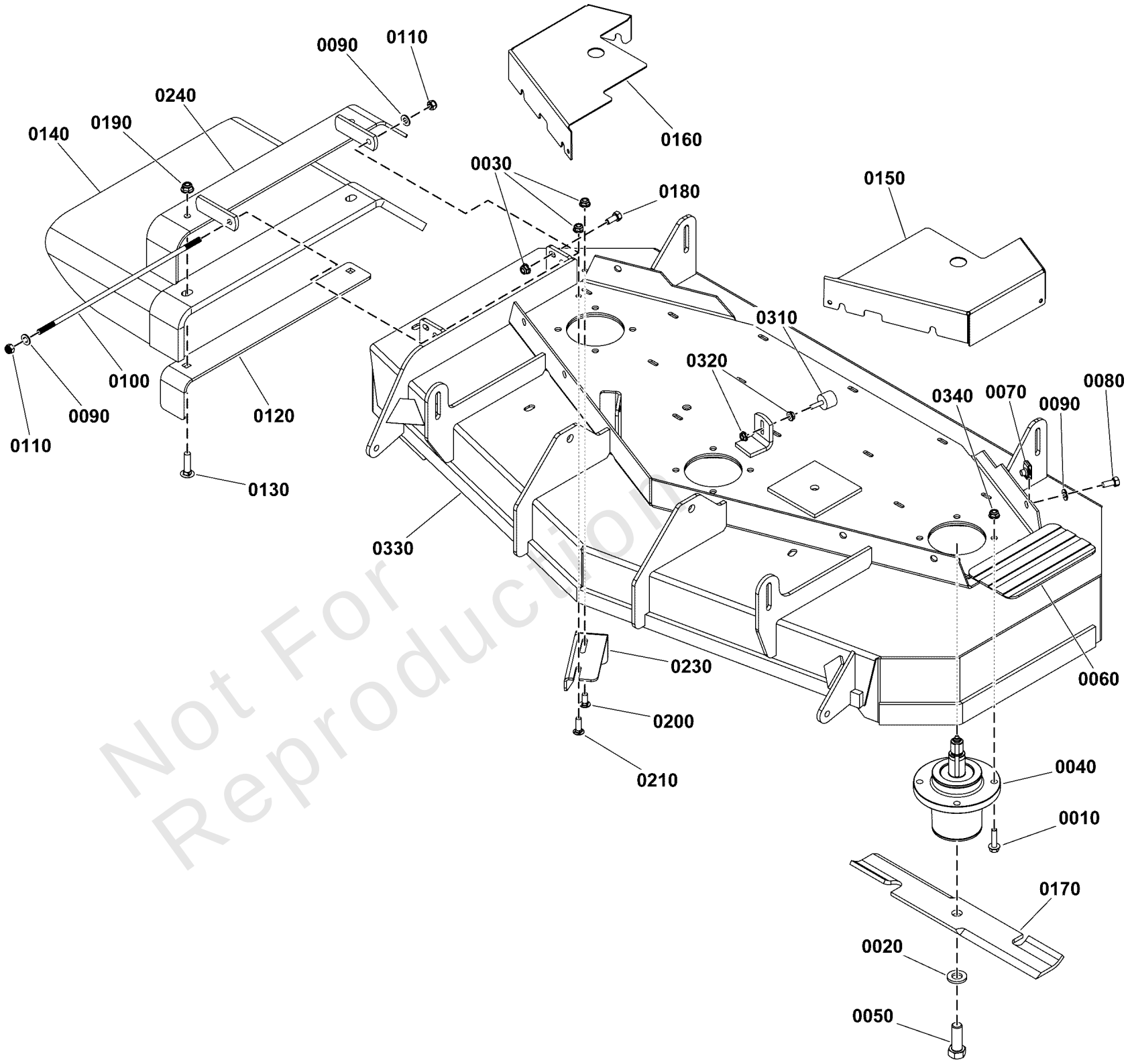

Not For Reproduction

Copyright © Briggs & Stratton. All Rights reserved

48" Mower Deck Group - Housing, Covers, Spindles & Blades

REF NO	PART NO	QTY	DESCRIPTION
0010	5025390X10	12	BOLT, 3/8-16 X 1-1/4, FLANGE, GD 5, CZ -(Torque spindle mounting bolt to 30 ft-lbs (41 Nm)
0020	5025477	3	WASHER, BLADE BOLT, 9/16" F436, CZ
0030	5025392	3	NUT, 5/16-18 HEX NYLOCK FLANGE NUT
0040	5061095	3	SPINDLE, ASSM, ALUMINUM - 5.25
0050	5025320X14	3	BOLT, 5/8-11 X 1-3/4 GD8 -(Torque blade mounting bolt to 120 ft-lbs (163 Nm)
0060	5101004	1	SAFETY WALK, 4.00 X 7.50
0070	5022308	6	BODY CLIP, 5/16-18-7GA MATERIAL
0080	5025011X6	6	BOLT, 5/16-18 X 3/4 GD5
0090	5025155	8	WASHER, 5/16" SAE
0100	5042555	1	ROD, 5/16 X 13.75, TBE, CZ
0110	5025045	2	NUT, 5/16-24 HEX NYLON LOCK
0120	5413401A	1	SUPPORT, DISCHARGE CHUTE - BLK
0130	5025146X12	2	BOLT, 3/8-16 X 1-1/2, CARRIAGE, GD5, CZ
0140	5413498	1	CHUTE, RUBBER DISCHARGE CHUTE (5104441)
0150	5408163B	1	GUARD, DECK, LH - RED
0160	5408162B	1	GUARD, 48" MOWER DECK, RH
0170	5101986S	1	BLADES, SET OF THREE (3); 16.25 X.25 X 2.5, 1 X 3.5 -(Set of 3 blades)
0180	5025011X6	1	BOLT, 5/16-18 X 3/4 GD5
0190	5025394	2	NUT, 3/8 - 16 HEX NYLOCK FLANGE
0200	5025145X6	1	BOLT, 5/16-18 X 3/4, CARRIAGE, GD5, CZ
0210	5025145X8	1	BOLT, 5/16-18 X 1, CARRIAGE, GD5, CZ
0230	5401344A	1	PLATE, DEFLECTOR - BLK
0240	5413403A	1	WELD, MOUNT, DISCHARGE CHUTE - BLK
0310	5105237	1	BUMPER, RUBBER, 1/4-20 X 7/8" STUD
0320	5025126	2	NUT, 1/4-20 HEX SERR. FLANGE
0330	5601091	1	DECK SHELL W/DECALS, 48, IS600Z (5417985B)
0340	5025394	12	NUT, 3/8 - 16 HEX NYLOCK FLANGE

Not For Reproduction

Copyright © Briggs & Stratton. All Rights reserved

48" Mower Deck Group - Pulleys, Belt & Idler Arm

Note: Unless noted otherwise, use the standard torque specifications

Mfg. No: 5901907

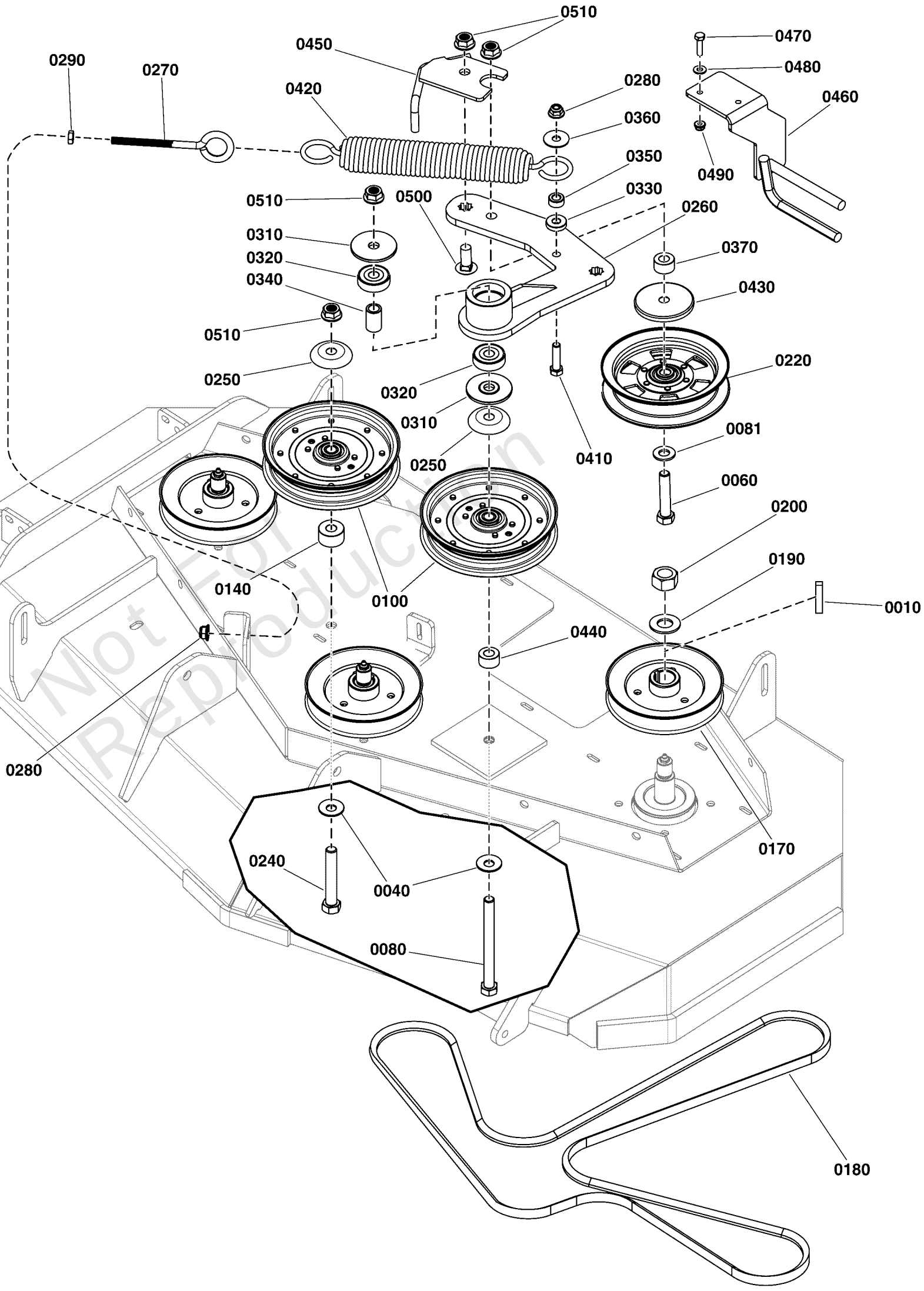

Not For Reproduction

Copyright © Briggs & Stratton. All Rights reserved

48" Mower Deck Group - Pulleys, Belt & Idler Arm

REF NO	PART NO	QTY	DESCRIPTION
0010	5050407X10	3	KEY, 1/4" SQ. X 1-1/4
0040	5025158	2	WASHER, 1/2 SAE
0060	5025017X20	1	BOLT, 1/2-13 X 2-1/2" GD5 CZ
0080	5025017X44	1	BOLT, 1/2-13 X 5-1/2" GD5 YZ
0081	5025158	1	WASHER, 1/2 SAE
0100	5101794	2	PULLEY, IDLER, 5" OD, 1" FACE, 5.75 FLANGE
0140	5047142	1	SPACER, .52 X 1.25 X .70, PM, CZ
0170	5023175	3	PULLEY, 5.540OB X .985ID, SINGLE B-SEC
0180	5103929	1	BELT, 5V-SEC, 158.90" EL, ARAMID, WRPD, RC
0190	5025406	3	WASHER, 3/4 BELLEVILLE CL/ZC
0200	5025405	3	NUT, 3/4-16 Hex
0220	5104716	1	PULLEY,IDLER,BACKSIDE,NOSEAM 6.25ODX.5ID
0240	5025017X22	1	BOLT, 1/2-13 X 2-3/4 GD5 CZ
0250	5101103	2	SHIELD, PULLEY BEARING, CZ
0260	5415907AYP	1	IDLER, Arm
0270	5023497	1	EYE BOLT, 3/8-16 X 5, 2.88THRD, 1EYE, CZ
0280	5025394	2	NUT, 3/8 - 16 HEX NYLOCK FLANGE
0290	5025084	1	NUT, 3/8-16 HEX JAM
0310	5104379	2	SPACER, IDLER ARM, 1/2 X 2.25
0320	5104383	2	BEARING, 6203-1/2", SEALED
0330	5044960	1	SPACER, .39 X 1.00 X .25, PM, CZ
0340	5104456	1	SPACER, .51 X .84 X 1.22, PM, CZ
0350	5044933	1	SPACER, .39 X .75 X .38, PM, CZ
0360	5025165	1	WASHER, 3/8" Fender
0370	5101162	1	SPACER, .52 X 1.00 X .56, PM, CZ
0410	5025013X12	1	BOLT, 3/8-16 X 1-1/2" GD5 CZ
0420	5104166	1	SPRING, EXT, 1.5ODX12.25X.234WIRE BLK
0430	5105145	1	SHIELD, BEARING, 1/2 ID X 2-7/8 OD, CZ
0440	5101162	1	SPACER, .52 X 1.00 X .56, PM, CZ
0450	84003145	1	GUIDE, BELT
0460	5415930AA	1	WELD, CLUTCH BELT GUIDE - BLK
0470	5025010X8	2	BOLT, 1/4-20 X 1" GD5 CZ
0480	5025154	2	WASHER, 1/4 SAE
0490	5025391	2	NUT, 1/4-20 Hex Nylock Flange
0500	5025324X10	1	BOLT, CARRIAGE 1/2-13 X 1-1/4 GD.5
0510	5025396	4	NUT, Hex Flange, Nylock, 1/2-13

Not For Reproduction

Copyright © Briggs & Stratton. All Rights reserved

48" Mower Deck Group - Rollers

Note: Unless noted otherwise, use the standard torque specifications

Mfg. No: 5901907

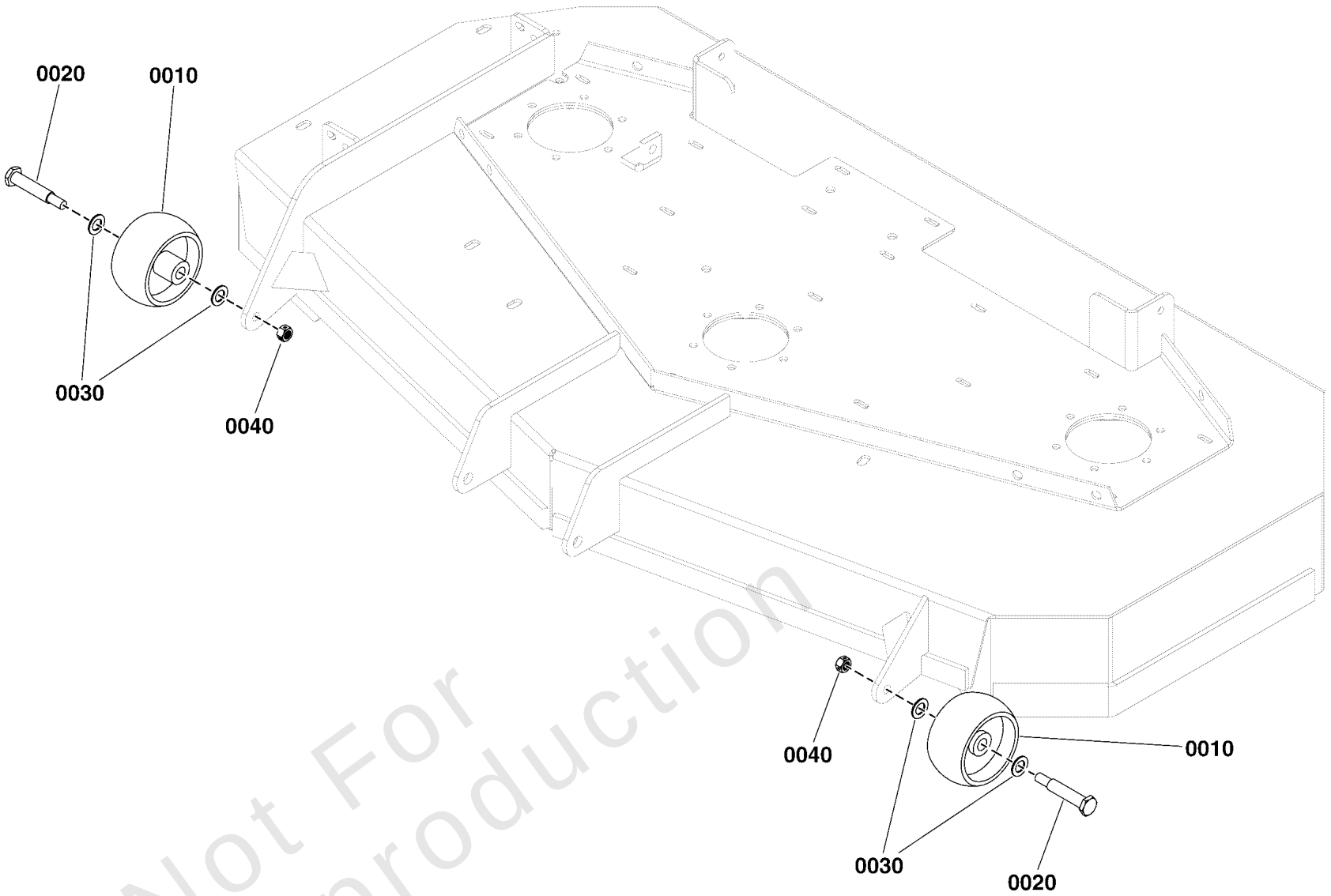

Not For Reproduction

Copyright © Briggs & Stratton. All Rights reserved

48" Mower Deck Group - Rollers

REF NO	PART NO	QTY	DESCRIPTION
0010	1714760	2	WHEEL- 2.00 WIDE 3.88 DIA 0.531ID POLY
0020	2108765	2	BOLT-WHEEL 3/8-16X2.781 .750 THRD YELLOW
0030	80003590	4	WASHER,.516IDX.875ODX.06,FLAT,ZC/CL
0040	5025394	2	NUT, 3/8 - 16 HEX NYLOCK FLANGE

Not For Reproduction

Copyright © Briggs & Stratton. All Rights reserved

Decal Group - Brand and Model

Note: Unless noted otherwise, use the standard torque specifications

Mfg. No: 5901907

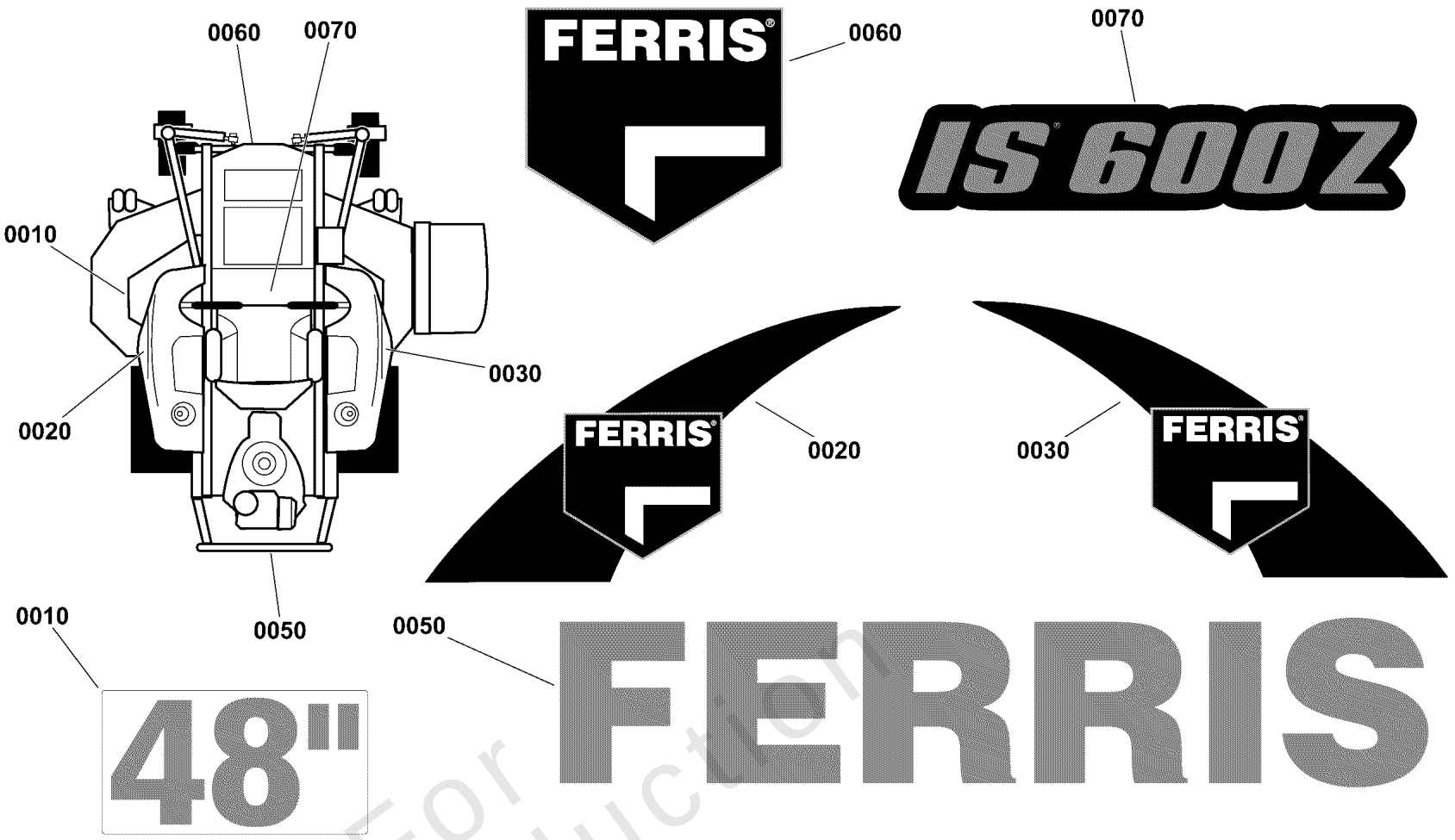

Not For Reproduction

Copyright © Briggs & Stratton. All Rights reserved

Decal Group - Brand and Model

REF NO	PART NO	QTY	DESCRIPTION
0010	5022811	1	DECAL, 48
0020	5109091	1	DECAL, TANK, SML, LH, FERRIS
0030	5109092	1	DECAL, TANK, SML, RH, FERRIS
0050	5103799FS	1	DECAL, BRAND
0060	5104755FS	1	DECAL, BRAND
0070	5104762FS	1	DECAL, Model

Not For Reproduction

Copyright © Briggs & Stratton. All Rights reserved

Decal Group - Safety & Operation

Note: Unless noted otherwise, use the standard torque specifications

Mfg. No: 5901907

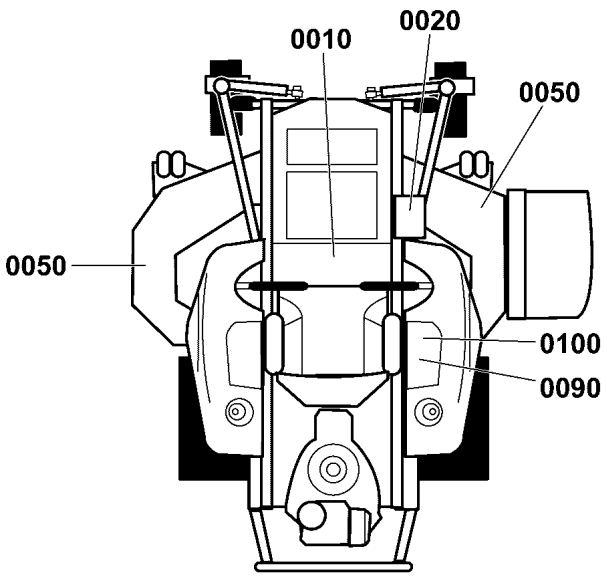

0010

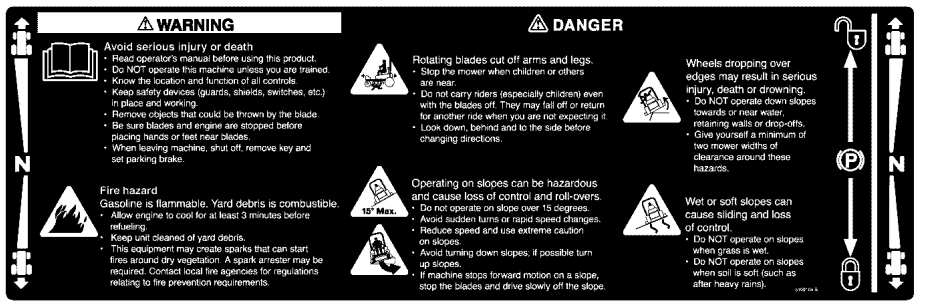

0130

0050

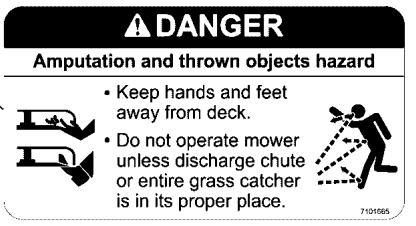

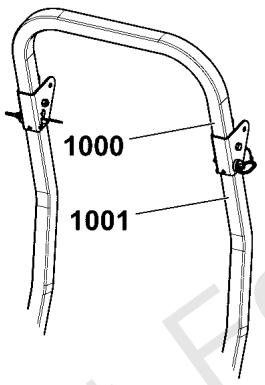

0110

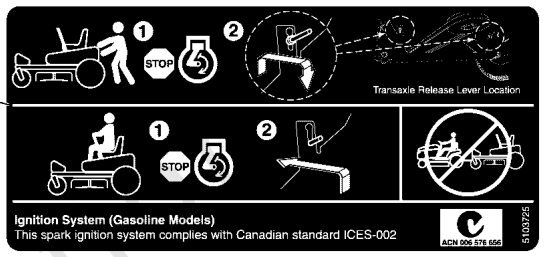

0080

0090

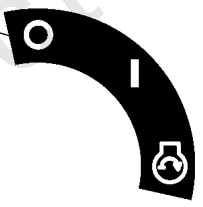

0100

1000

1001

0020

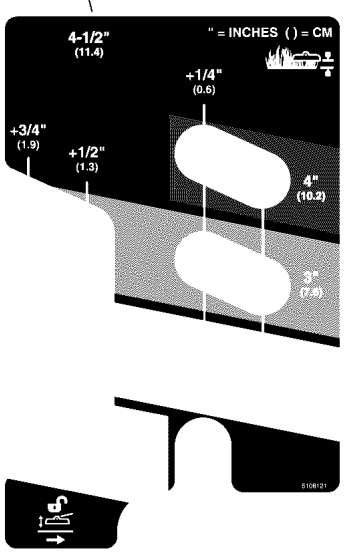

0040

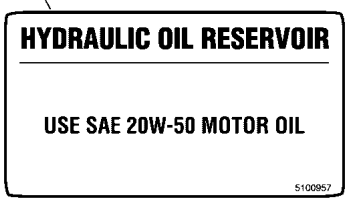

0120

Belts & Blades	
Tractor	
Pump Drive Belt	5103885
44" Mower	
Deck Drive Belt	5103928
Mower Blade	5061827S
48" Mower	
Deck Drive Belt	5103929
Mower Blade	5101986S
52" Mower	
Deck Drive Belt	5105529
Mower Blade	5101756S

5105644

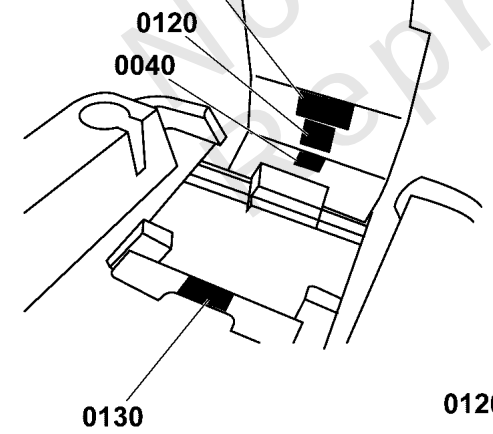

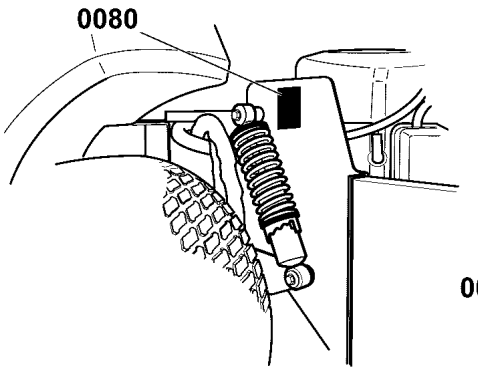

0070

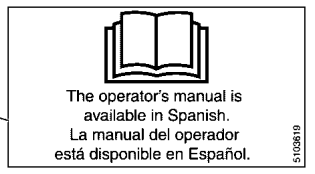

Not For Reproduction

Decal Group - Safety & Operation

REF NO	PART NO	QTY	DESCRIPTION
0010	5103595	1	DECAL, MAIN SAFETY -(S/N: 4000036371 and below)
0010	84008252	1	DECAL, MAIN SAFETY -(S/N: 4000036372 and above)
0020	5108121	1	DECAL, CUTTING HEIGHT, IS600
0040	5100957	1	DECAL, HYDRAULIC OIL, SAE 20W50
0050	7101665	2	DECAL, DANGER DO NOT OPERATE W/O DEFLECT
0070	5103619	1	DECAL, MANUAL AVAILABLE IN SPANISH
0080	5100683	2	DECAL, Warning, ROLL BAR
0090	5048970	1	DECAL, IGNITION CONTROL
0100	5100280	1	DECAL, Throttle Control
0110	5103725	1	DECAL, TRANSAXLE RELEASE, 600/700
0120	5105644	1	DECAL, BELT & BLADE, IS600Z-44/52 DOM
0130	5103184	1	DECAL, WARNING, HAND IN BELT, ENG ONLY
1000	5100935	1	DECAL, WARNING & CAUTION, ROPS
1001	5100405	1	DECAL, WARNING OVERHANG, ROPS (SV)

Not For Reproduction

Copyright © Briggs & Stratton. All Rights reserved

Deck Lift Group

Note: Unless noted otherwise, use the standard torque specifications

Mfg. No: 5901907

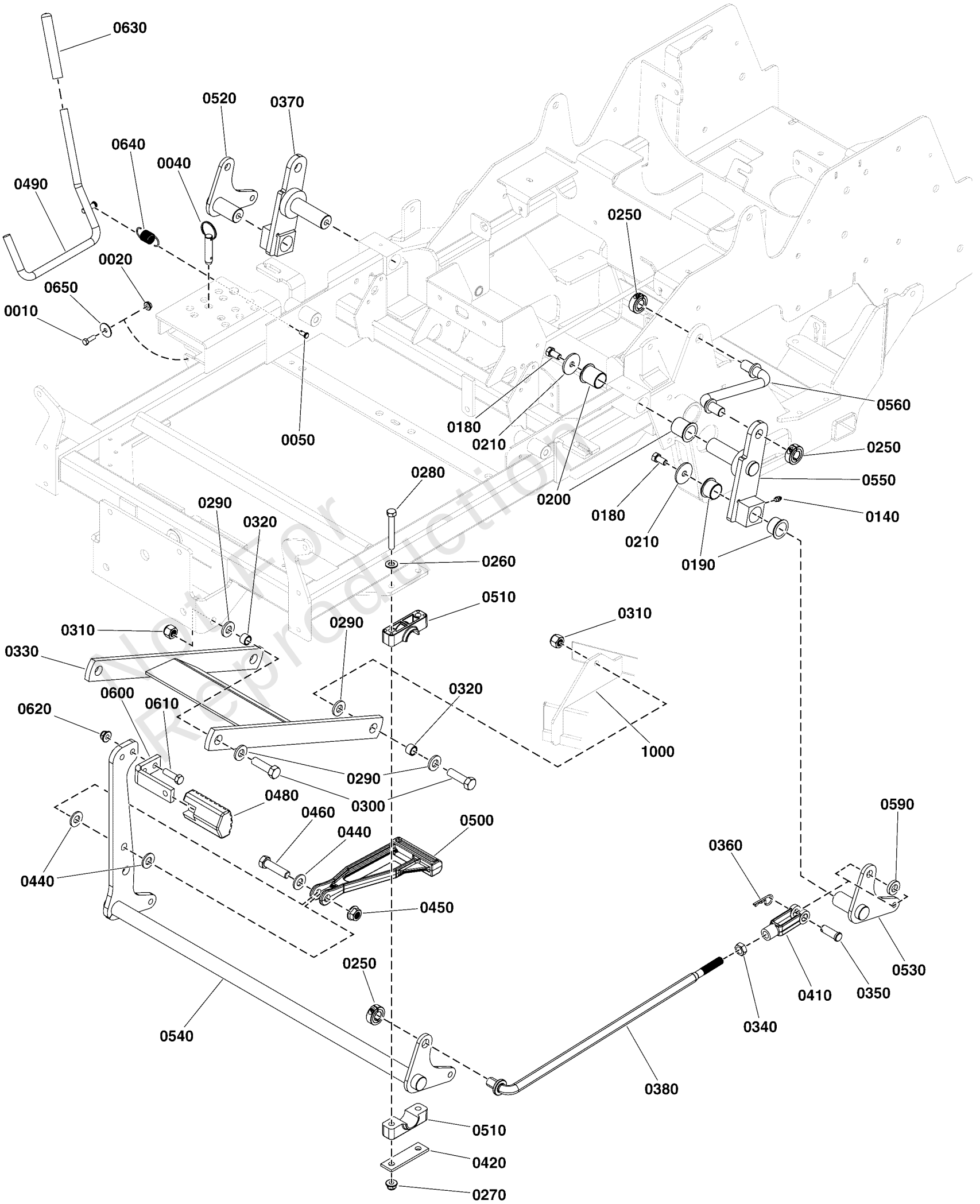

Not for Reproduction

Deck Lift Group

REF NO	PART NO	QTY	DESCRIPTION
0010	-----	2	HHCS, 1/4-20 X 0.625, GR5, ZINC/CLEAR
0020	5025126	2	NUT, 1/4-20 HEX SERR. FLANGE
0040	5023498	1	PIN, HITCH, 1/2 X 2.00 OAL, YP
0050	5025212X4	1	PIN, CLEVIS, 1/4 X 1/2, PLATED
0140	5020095	2	GREASE FITTING, 1/4-28 Straight
0180	5025443	4	BOLT, 3/8-16 X 3/4, PLT W/PATCH
0190	5023356	4	BUSHING, 1.00 X 1.13 X .75, PLASTIC
0200	5023343	4	BUSHING, 1.00 X 1.13 X 1.38, Plastic
0210	5100548	4	WASHER, .390 X 1.50 X .109, YZ
0250	5020441	6	COLLAR, 5/8" Split
0260	5025156	6	WASHER, 3/8 SAE
0270	5025394	4	NUT, 3/8 - 16 HEX NYLOCK FLANGE
0280	5025013X22	4	BOLT, 3/8-16 X 2-3/4" GD5 CZ
0290	5025440	8	WASHER, 1/2" GD9 YZ
0300	5025018X14	4	BOLT, 1/2-20 X 1-3/4" GD8 CZ
0310	5025098	4	NUT, Hex, Nylon Lock, 1/2-20
0320	5020870	4	INSERT, Bearing
0330	5409736A	1	WELD, PULLER BAR, IS600 - BLK
0340	5025089	2	NUT, 1/2-20 Hex Jam
0350	5025479	2	CLEVIS PIN, 1/2 X 1.36 SAE STANDARD
0360	5025210	2	3/32 X 1-5/8 HAIR PIN CLIP
0370	5402534A	1	WELD, REAR LIFT - RH - IS500Z - BLK
0380	5101218	2	ROD, DECK LIFT, SNP
0410	5023174	2	CLEVIS, 1/2-20, STEEL, CLEAR ZINC
0420	5403925A	2	PLATE, PIVOT BLOCK SUPPORT - BLK
0440	5025158	3	WASHER, 1/2 SAE
0450	5025396	1	NUT, Hex Flange, Nylock, 1/2-13
0460	5025017X16	1	BOLT, 1/2-13 X 2" GD5 CZ
0480	5104262	1	PEDAL, Rubber
0490	84010944	1	KIT, Latch w/Grip
0500	5104133	1	LINK, DECK LIFT, CAST IRON
0510	5100634	4	PIVOT BLOCK, PLASTIC
0520	5409734A	1	WELD, HANGER, REAR, RH - BLK
0530	5409733A	1	WELD, HANGER, REAR, LH - BLK
0540	5409731B	1	WELD, DECK LIFT SHAFT, IS600
0550	5402533A	1	WELD, REAR LIFT - LH - IS500Z - BLK
0560	5103620	2	ROD, SUSPENSION LINK, IS600
0590	5100520	2	SPACER, .52 X 1.00 X .22, PM, CZ
0600	5061569A	1	PEDAL, FOOT - BLK
0610	5025013X10	2	BOLT, 3/8-16 X 1-1/4" GD5 CZ
0620	5025394	2	NUT, 3/8 - 16 HEX NYLOCK FLANGE
0630	5021880	1	GRIP, FOAM, .475 X 4.35 X .095
0640	5010213	1	SPRING-EXT, .740 ODX2.025LGX.072WR, BLK
0650	5025288	2	WASHER, 1/4" Fender
1000	-----	1	Refer to: Housing, Covers, Spindles & Blades Group

Not For Reproduction

Copyright © Briggs & Stratton. All Rights reserved

Note: Unless noted otherwise, use the standard torque specifications

Mfg. No: 5901907

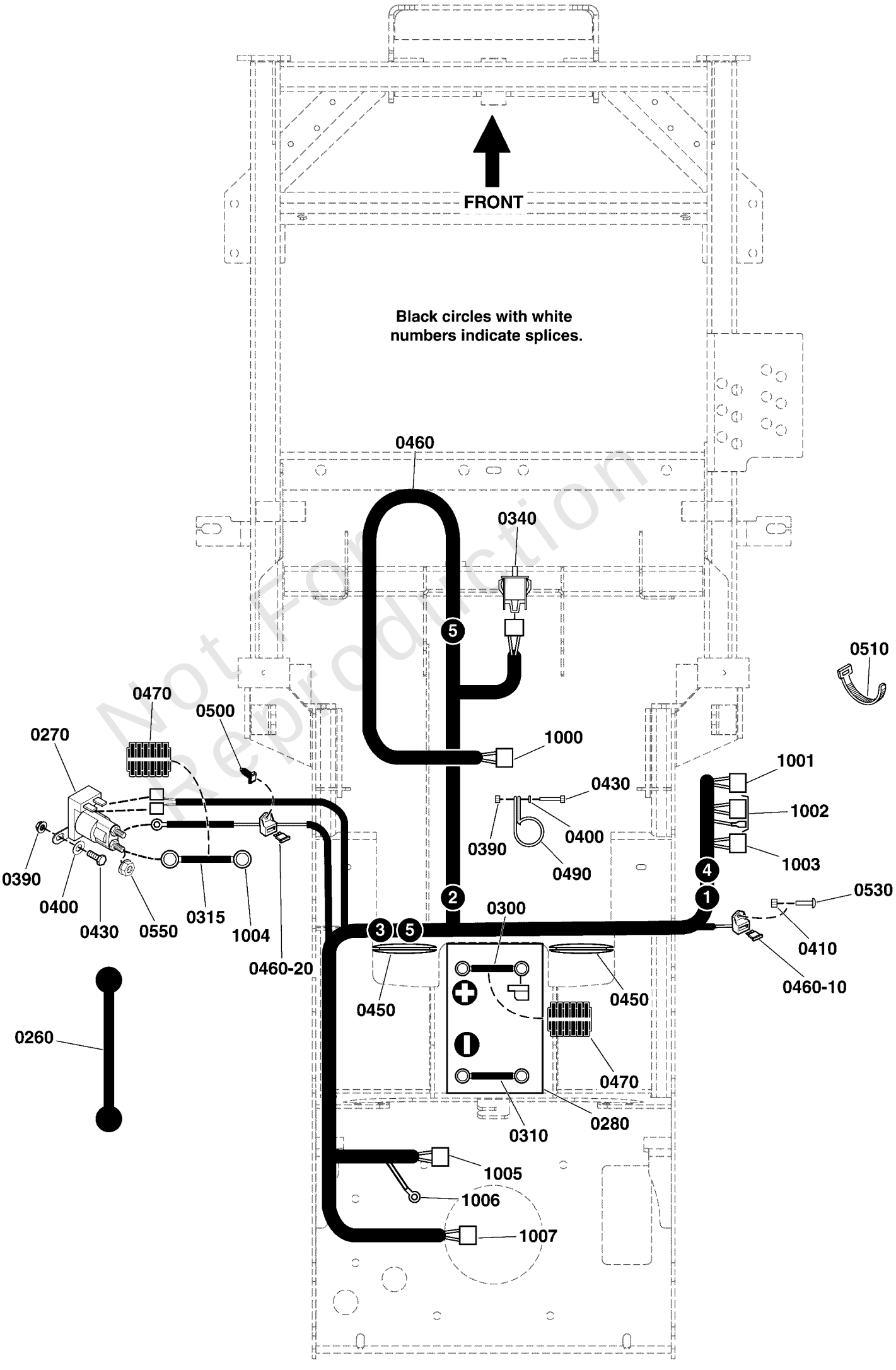

Copyright © Briggs & Stratton. All Rights reserved

Electrical Group

REF NO	PART NO	QTY	DESCRIPTION
0260	1722009	1	STRAP, BATTERY, 14 LONG, Rubber
0270	1755382	1	SOLENOID, STD-BRACKET, 2-SPADE
0280	-----	1	BATTERY, 11U1L, 350 CCA -(Refer to Note: *)
0300	5021405	1	BATTERY CABLE, POS, 22, 1/4-5/16
0310	5047690	1	BATTERY CABLE, NEG, 14, 5/16-13/32
0315	5023488	1	BATTERY CABLE, POS, 22, 1/4-5/16
0340	7022886	1	SWITCH, DP NO/NC SNAP-IN
0390	5025126	4	NUT, 1/4-20 HEX SERR. FLANGE
0400	5025154	4	WASHER, 1/4 SAE
0410	5025271	4	NUT, Hex, Nylon Lock, #10-24
0430	5025010X6	4	BOLT, 1/4"-20 X 3/4" GD5 YZ
0450	5100716	2	GROMMET, 2" ID
0460	5105536	1	HARNESS, Wiring, Small ZTR
0460-10	5101935	1	FUSE, ATO-15 (15 AMP)(SV)
0460-20	5021603	1	FUSE, ATO-20 (20 AMP)(SV)
0470	5050927X18	2	WIRE LOOM, 3/8 ID X 18 IN
0490	5021500	3	CLAMP, VINYL INSULATED, 1.00
0500	5103761	1	FIR TREE MOUNT, PACKARD
0510	5021030	3	TIE, SELF-LOCKING, 6"
0530	5025179X4	4	SCREW, #10-24 X 1/2" ROUND PHILLIPS
0550	80003921	2	NUT,1/4-20,KEPS,CONICAL WSHR,ZC/CL
1000	-----	1	Connects to Seat Switch
1001	-----	1	Connects to PTO Switch
1002	-----	1	Connects to Ignition Switch
1003	-----	1	Connects to Hour Meter
1004	-----	1	Connects to Engine Starter
1005	-----	1	Connects to Engine
1006	-----	1	Connects to Ground
1007	-----	1	Connects to PTO Clutch

Not For Reproduction

Footnotes:

Note: * Not for sale. Obtain locally.

Copyright © Briggs & Stratton. All Rights reserved

Electrical Schematic - Charging Circuit B&S 44T977, 49T877

Note: Unless noted otherwise, use the standard torque specifications

Mfg. No: 5901907

5105536 MAIN WIRE HARNESS - BRIGGS & STRATTON 44T977, 49T877 ENGINES

5105536A

(If internal schematic of the switch is not shown, the image of the switch represents the back view of the connector as it is connected to the switch.)

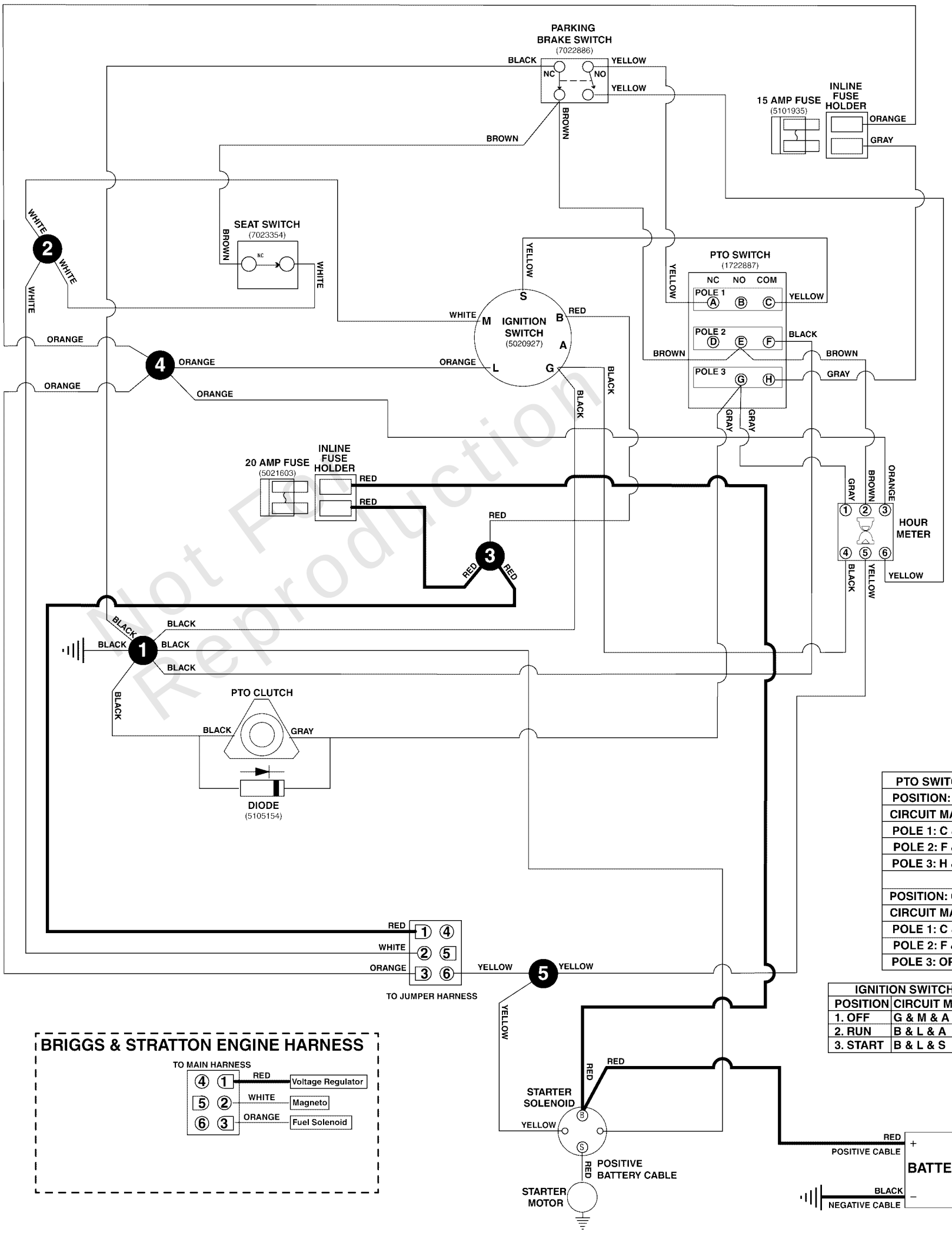

Not For Reproduction

Copyright © Briggs & Stratton. All Rights reserved

Electrical Schematic - Charging Circuit B&S 44T977, 49T877

REF NO	PART NO	QTY	DESCRIPTION
5105536	5105536	1	HARNESS, Wiring, Small ZTR

Not For Reproduction

Copyright © Briggs & Stratton. All Rights reserved

Electrical Schematic - Cranking Circuit B&S 44T977, 49T877

Note: Unless noted otherwise, use the standard torque specifications

Mfg. No: 5901907

5105536 MAIN WIRE HARNESS - BRIGGS & STRATTON 44T977, 49T877 ENGINES

5105536A

(If internal schematic of the switch is not shown, the image of the switch represents the back view of the connector as it is connected to the switch.)

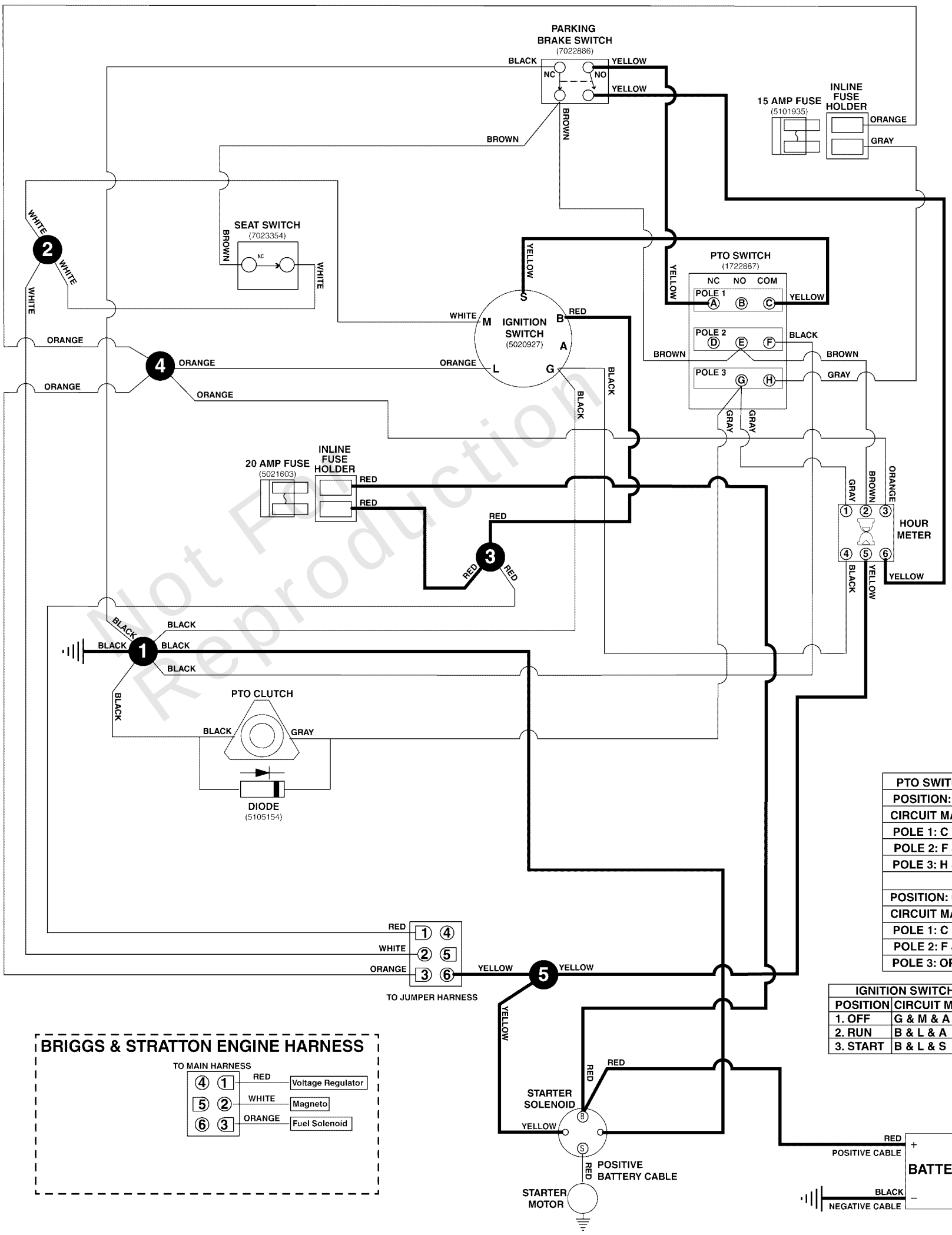

Not For Reproduction

Electrical Schematic - Cranking Circuit B&S 44T977, 49T877

REF NO	PART NO	QTY	DESCRIPTION
5105536	5105536	1	HARNESS, Wiring, Small ZTR

Not For Reproduction

Copyright © Briggs & Stratton. All Rights reserved

Electrical Schematic - Ign. Grounding Circuit/Op. Pres. B&S 44T977, 49T877

Note: Unless noted otherwise, use the standard torque specifications

Mfg. No: 5901907

5105536 MAIN WIRE HARNESS - BRIGGS & STRATTON 44T977, 49T877 ENGINES

5105536A

(If internal schematic of the switch is not shown, the image of the switch represents the back view of the connector as it is connected to the switch.)

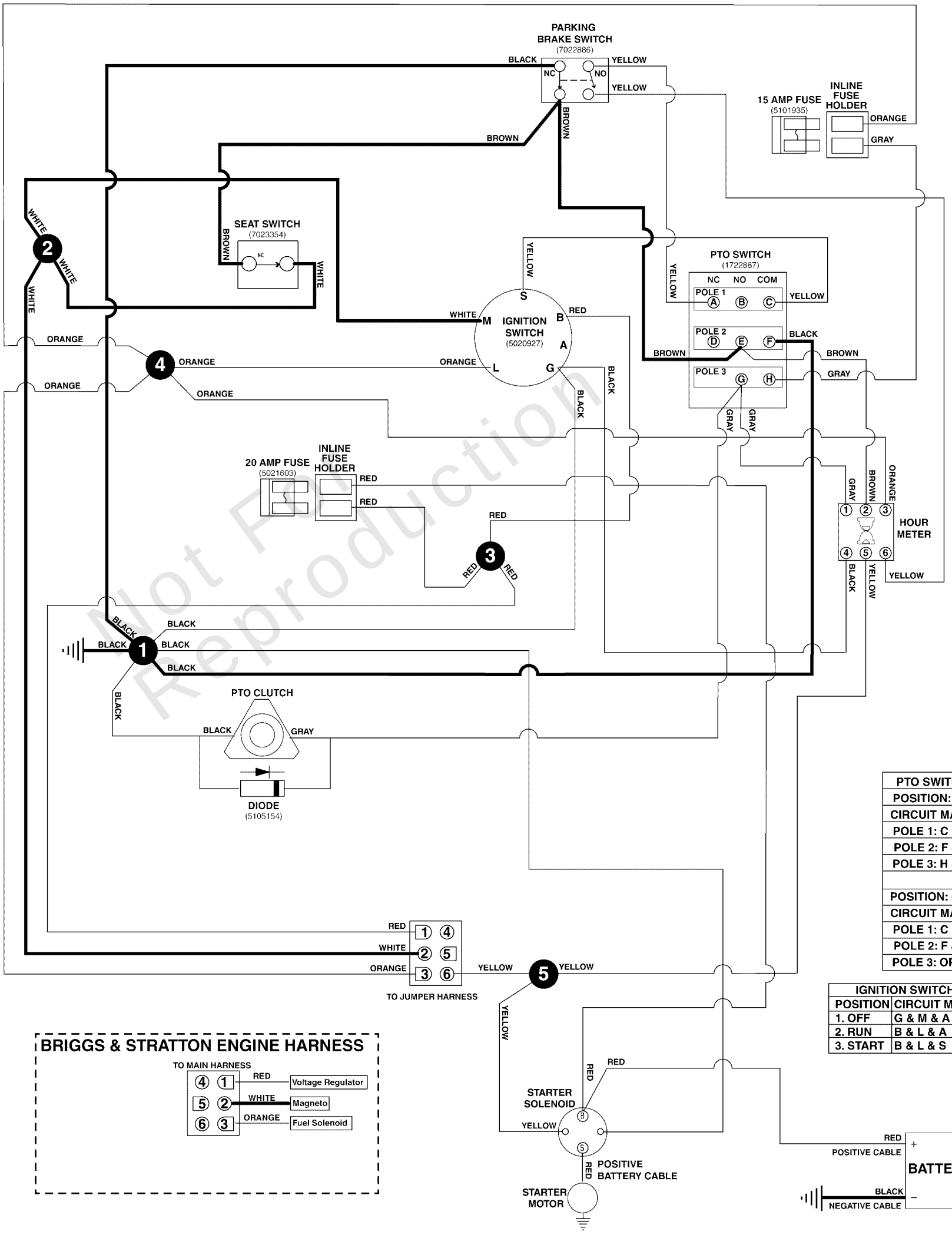

Not For Reproduction

Copyright © Briggs & Stratton. All Rights reserved

Electrical Schematic - Ign. Grounding Circuit/Op. Pres. B&S 44T977, 49T877

REF NO	PART NO	QTY	DESCRIPTION
5105536	5105536	1	HARNESS, Wiring, Small ZTR

Not For Reproduction

Copyright © Briggs & Stratton. All Rights reserved

Electrical Schematic - PTO Clutch Circuit B&S 44T977, 49T877

Note: Unless noted otherwise, use the standard torque specifications

Mfg. No: 5901907

5105536 MAIN WIRE HARNESS - BRIGGS & STRATTON 44T977, 49T877 ENGINES

5105536A

(If internal schematic of the switch is not shown, the image of the switch represents the back view of the connector as it is connected to the switch.)

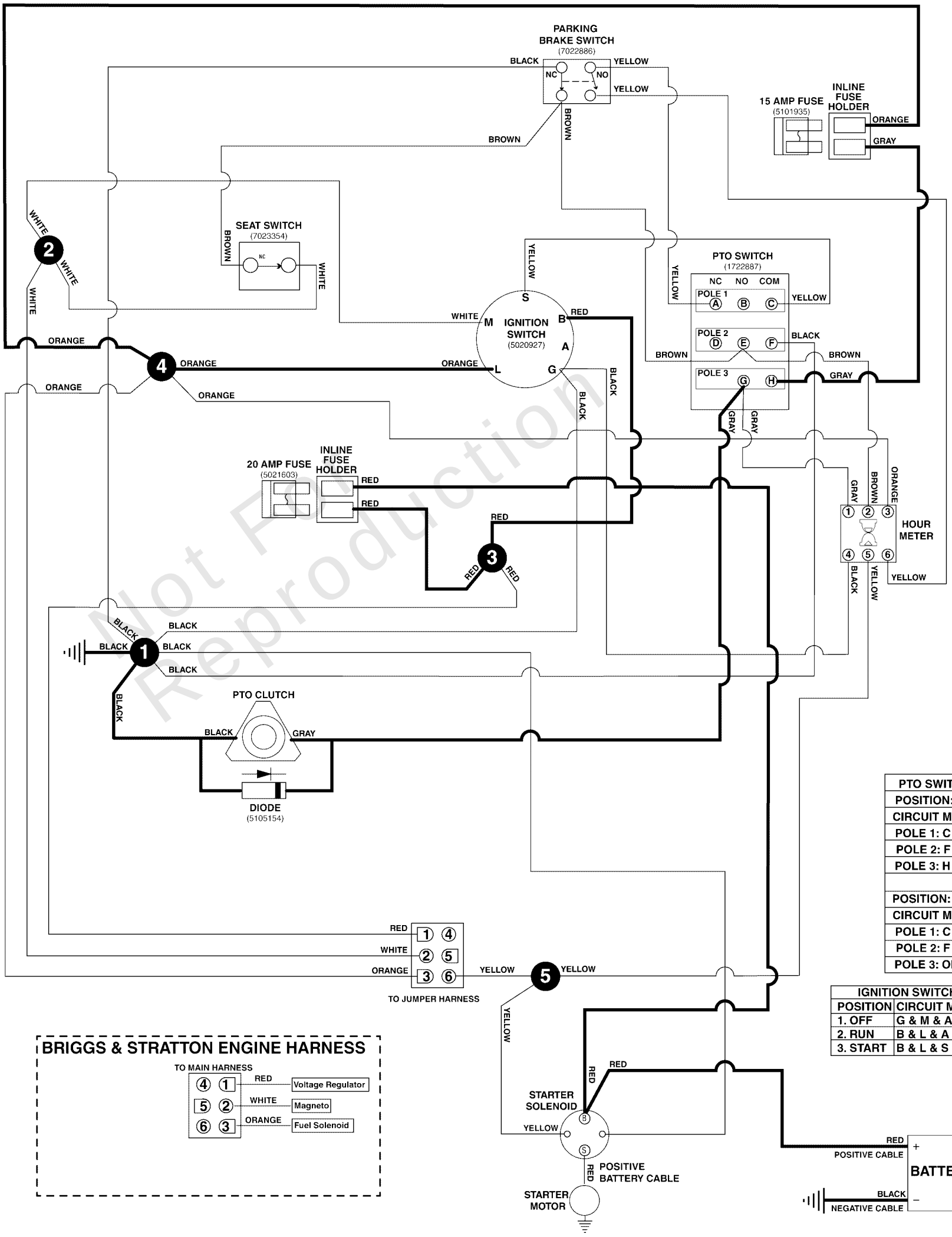

Not For Reproduction

Copyright © Briggs & Stratton. All Rights reserved

Electrical Schematic - PTO Clutch Circuit B&S 44T977, 49T877

REF NO	PART NO	QTY	DESCRIPTION
5105536	5105536	1	HARNESS, Wiring, Small ZTR

Not For Reproduction

Copyright © Briggs & Stratton. All Rights reserved

Engine & PTO Group - Briggs & Stratton 44T977

Note: Unless noted otherwise, use the standard torque specifications

Mfg. No: 5901907

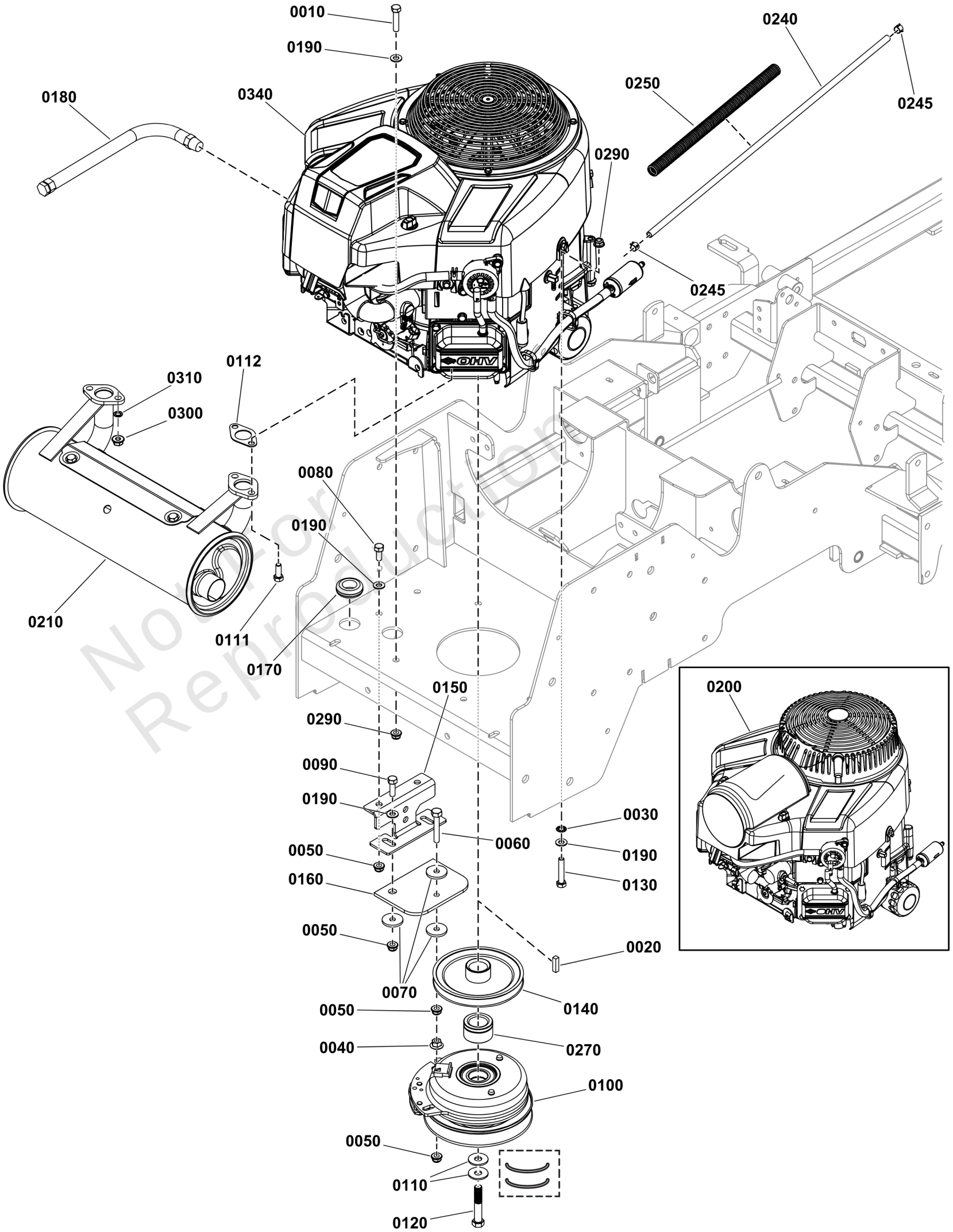

Not for Reproduction

Copyright © Briggs & Stratton. All Rights reserved

Engine & PTO Group - Briggs & Stratton 44T977

REF NO	PART NO	QTY	DESCRIPTION
0010	5025025X12	2	BOLT, 5/16-24 X 1-1/2, GD8, PHOS
0020	5050407X8	1	KEY, 1/4 SQ X 1
0030	5025188	2	WASHER, 5/16" Internal Tooth Lock
0040	5025139	1	NUT, 5/16-18 HEX SERRATED FLANGE (LARGE)
0050	5025392	6	NUT, 5/16-18 HEX NYLOCK FLANGE NUT
0060	5025055X16	1	BOLT, 5/16-18 X 2 GD5 TFL, CZ
0070	5044617	4	WASHER, .34 X 1.25 X 10 GA
0080	5025011X6	2	BOLT, 5/16-18 X 3/4 GD5
0090	5025011X8	2	BOLT, 5/16-18 X 1" GRD5 YZ
0100	5105087	1	CLUTCH, WARNER, 125 FT LBS, 1-1/8" BORE
0110	5025585	2	BELLEVILLE WASHER, 1.1875 X .442 X .098
0111	94480	4	SCREW -(S/N: 4001989359 and below)
0112	273485	2	GASKET, EXHAUST
0120	5102864	1	BOLT, CRANKSHAFT,7/16-20X2-1/2, GD8 -(Torque clutch mounting bolt to 65 ft-lbs (88 Nm)
0130	5025025X14	2	BOLT, 5/16-24 X 1-3/4, GD8, PHOS -(Torque engine mounting bolts to 17 ft-lbs (23 Nm)
0140	5103558	1	PULLEY,CRANKSHAFT,1.125ID X 5.5OD A SECT
0150	5410367A	1	ANCHOR, CLUTCH, IS600-IS700 - BLK
0160	5043636	1	CLUTCH ANCHOR PAD
0170	5021379	1	GROMMET, 7/8"
0180	5048681	1	HOSE, OIL DRAIN
0190	5025155	8	WASHER, 5/16" SAE
0200	-----	1	ENGINE PACKED -(S/N: 4002218814 and below)
0210	593249	1	MUFFLER, RIGHT OUTLET ASSY
0240	5050831X25	1	Fuel Line, 25" Long (tank to filter)
0245	93807	2	CLAMP, Hose
0250	5050833X13	1	WIRE LOOM, 1/2 ID, 13.00 LONG
0270	5047033	1	SPACER, 1.13 X 1.75 X 1.03, CZ
0290	5025616	4	NUT, 5/16-24, TOP LOCK FLANGE, GD8 PHOS
0300	690941	4	NUT -(S/N: 4001989360 and above)
0310	5023217SM	4	WASHER, 5/16 LIGHT LO -(S/N: 4001989360 and above)
0340	-----	1	Engine, Briggs & Stratton CXi -(S/N: 4002218815 and above)

Not For Reproduction

Copyright © Briggs & Stratton. All Rights reserved

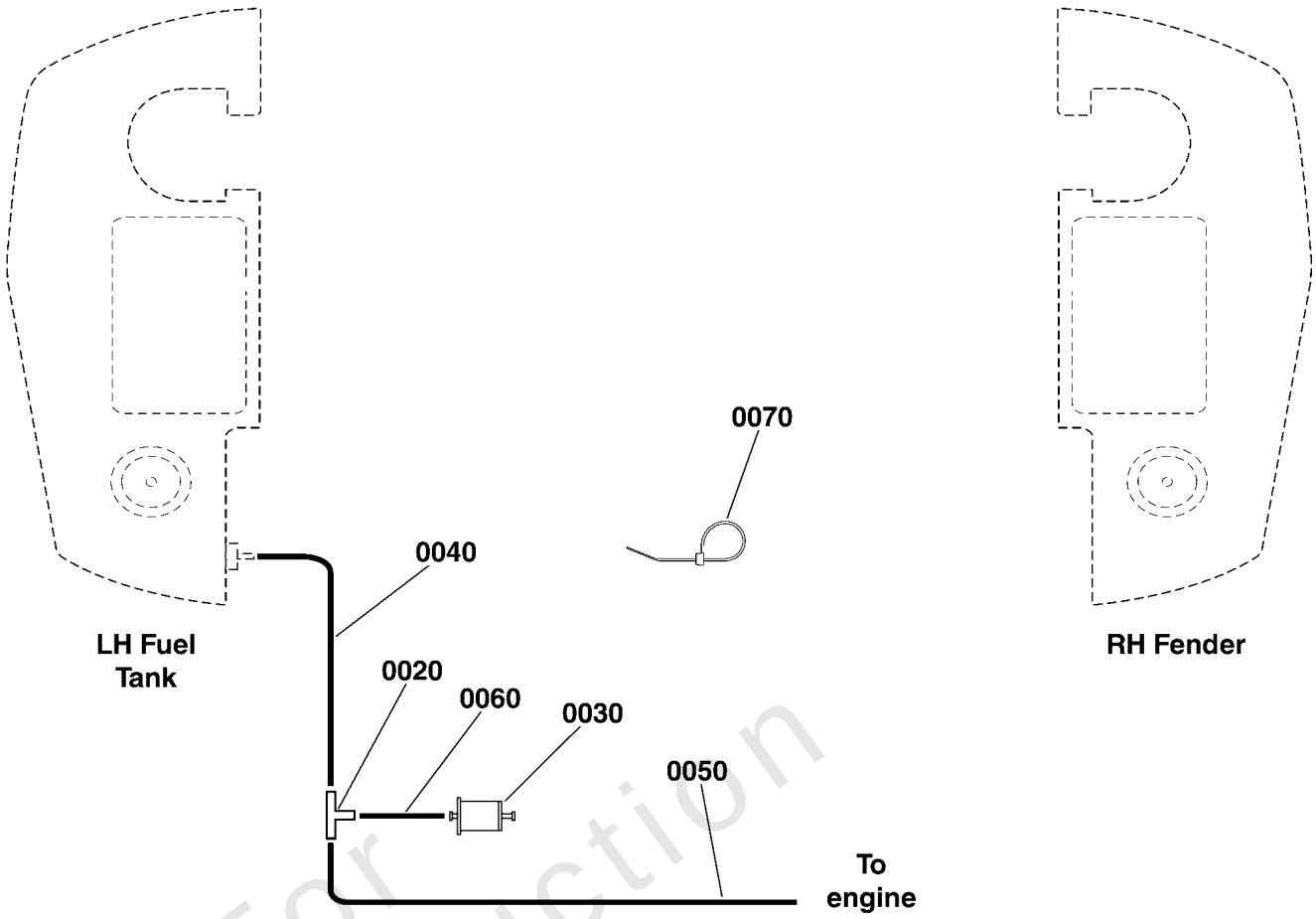

Not For Reproduction

Copyright © Briggs & Stratton. All Rights reserved

Evap Group

REF NO	PART NO	QTY	DESCRIPTION
0020	5103062	1	FITTING, 3/16" TEE, BARB TYPE, HDPE
0030	80025019	1	FILTER, FUEL
0040	7700552X27	1	HOSE, VAPOR, 5MM ID, 27.00 LG -(Tank to T fitting)
0050	7700552X12	1	HOSE, VAPOR, 5MM ID, 12.00 LG -(T fitting to engine)
0060	7700552X2	1	HOSE, VAPOR, 5MM ID, 2.00 LG -(T fitting to filter)
0070	5021030	2	TIE, SELF-LOCKING, 6"

Not For Reproduction

Copyright © Briggs & Stratton. All Rights reserved

Fuel Tank & Mount Group

Note: Unless noted otherwise, use the standard torque specifications

Mfg. No: 5901907

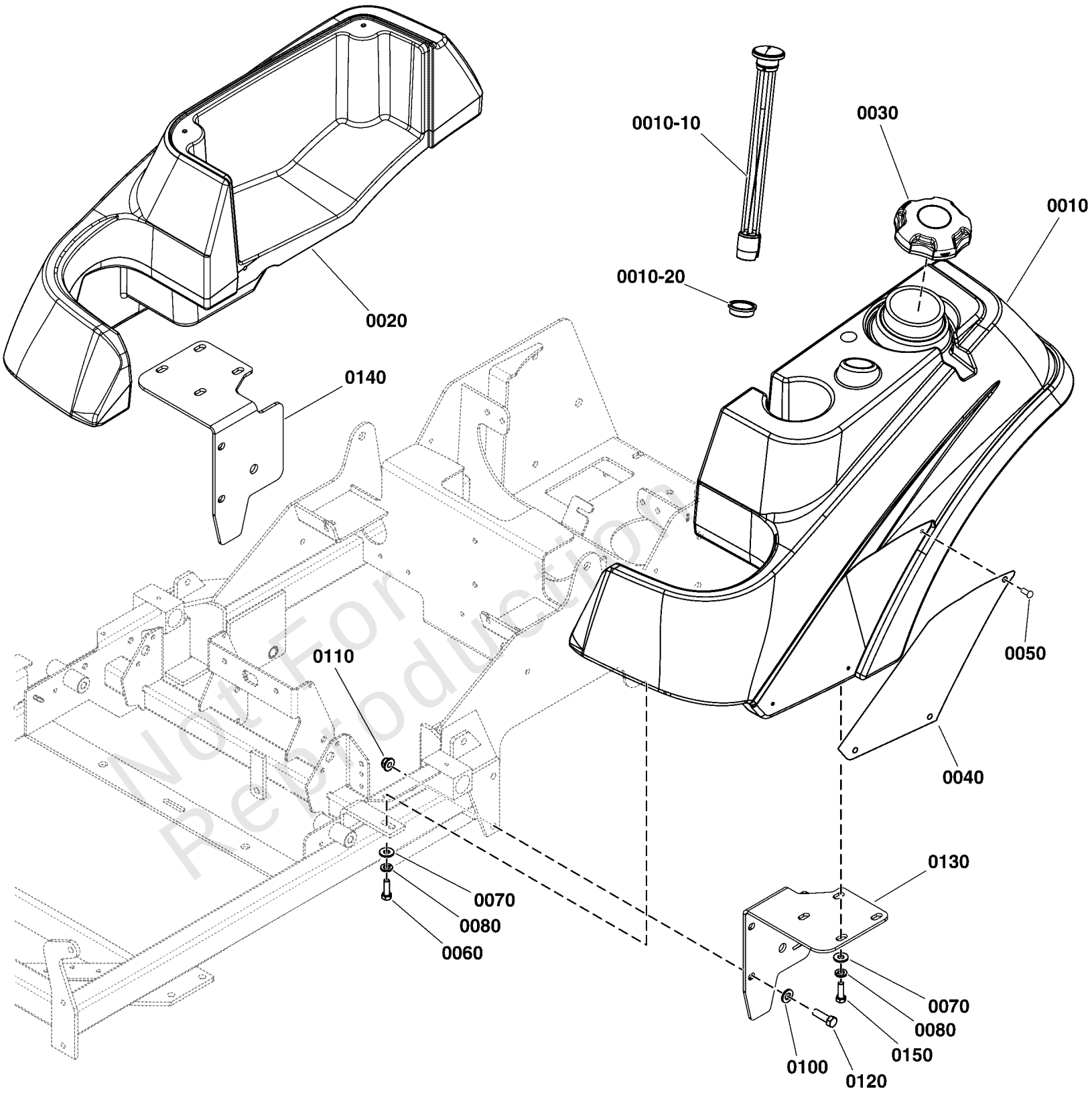

Not For Reproduction

Copyright © Briggs & Stratton. All Rights reserved

Fuel Tank & Mount Group

REF NO	PART NO	QTY	DESCRIPTION
0010	5103176	1	TANK, FUEL - LH, IS500 & IS1500
0010-10	5022917	1	GAUGE, FUEL, 12 -(SV)
0010-20	5022917X1	1	GROMMET, FUEL GAUGE (SV) -(SV)
0020	5049948	1	TANK, FENDER, CITATION/ZT4000 - RH
0030	5103005	1	FUEL CAP, 3-1/2", MANAGED VENT OUT, 12"
0040	5400250B	2	PLATE, BADGE - IS1500 - RED
0050	5025386	6	SCREW, Allen Head, #10-24 x 3/8"
0060	5025011X8	2	BOLT, 5/16-18 X 1" GRD5 YZ
0070	5025292	10	WASHER, 5/16 GRADE 9, FLAT
0080	5025170	10	WASHER, 5/16 LOCK CZ
0100	5025293	4	WASHER, 3/8" GR. 9 FLAT
0110	5025394	4	NUT, 3/8 - 16 HEX NYLOCK FLANGE
0120	5025013X10	4	BOLT, 3/8-16 X 1-1/4" GD5 CZ
0130	5416831A	1	WELD, FUEL TANK MOUNT- LH - BLK
0140	5416830A	1	WELD, FUEL TANK MOUNT- RH - BLK
0150	5025011X6	8	BOLT, 5/16-18 X 3/4 GD5

Not For Reproduction

Copyright © Briggs & Stratton. All Rights reserved

Note: Unless noted otherwise, use the standard torque specifications

Mfg. No: 5901907

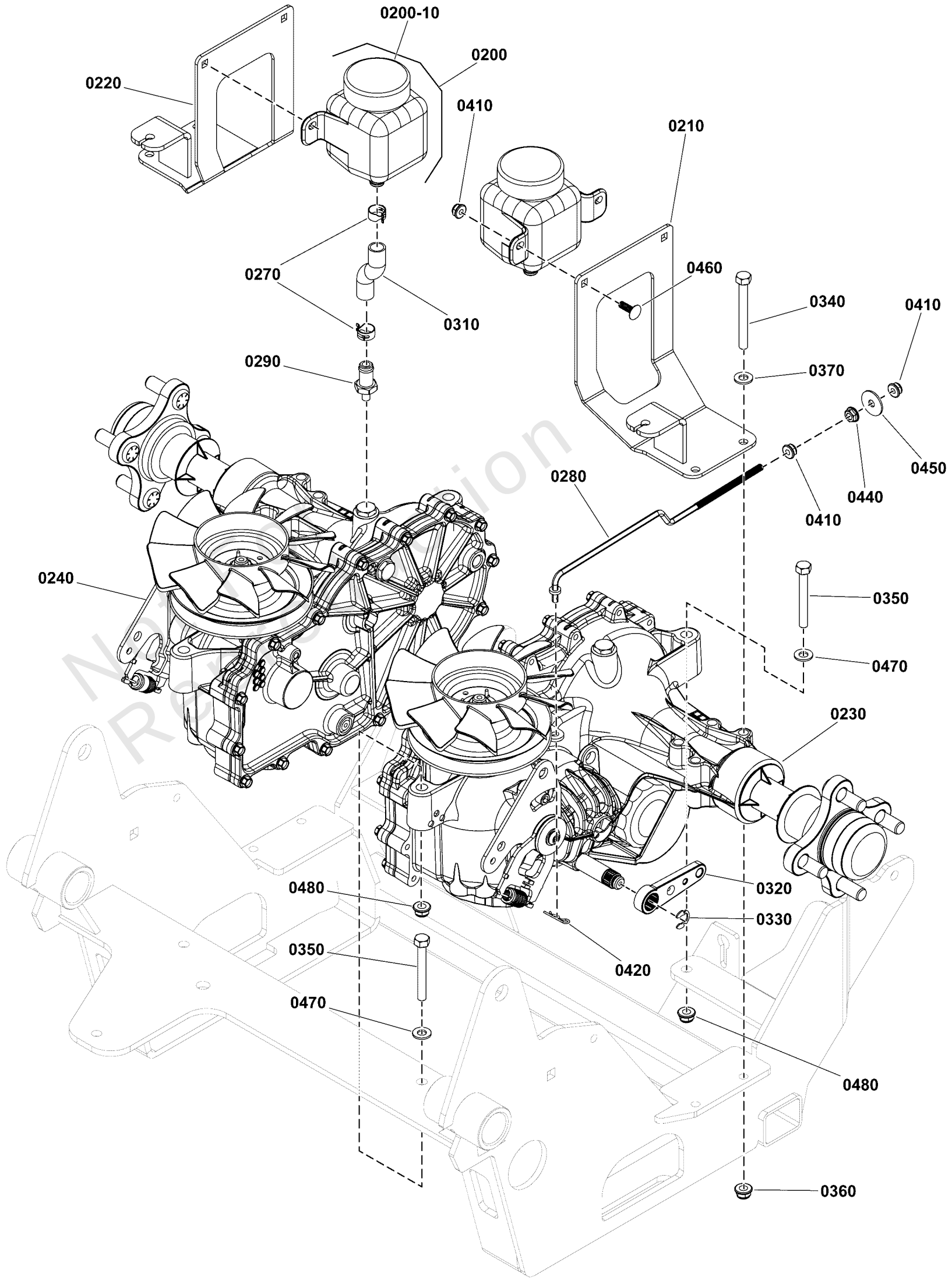

Copyright © Briggs & Stratton. All Rights reserved

Hydraulic Group

REF NO	PART NO	QTY	DESCRIPTION
0200	5100473	2	RESERVOIR, HYDRO OIL, 350 ML
0200-10	5100778X1	2	RESERVIOR CAP
0210	5409905AA	1	WELD, MOUNT, TANK, HYD, LH, IS600 - BLK
0220	5409909AA	1	WELD, MOUNT, TANK, HYD, RH, IS600 - BLK
0230	5105085	1	TRANSAXLE, ZT3200, LH, ZJ-KYEF-8T7C-14RX -(S/N: 4001547047 and below)
0230	5109252	1	TRANSAXLE, ZT-3200, LH,ZJ-KYEF-9T7C-14RX -(S/N: 4001547048 and above)
0240	5105086	1	TRANSAXLE, ZT3200, RH, ZJ-GYEF-8T7B-14RX -(S/N: 4001547047 and below)
0240	5109251	1	TRANSAXLE, ZT-3200, RH,ZJ-GYEF-9T7B-14RX -(S/N: 4001547048 and above)
0270	5023268	4	CLAMP, Hose
0280	5103631	2	ROD, DUMP VALVE, S125XT, CZ
0290	5103687	2	FITTING, #6 O-RING 1/2 HOSE BARB, STRAIGHT
0310	5103774X2P5	2	TUBING, TYGON, .50 ID X 2.50
0320	5103750	2	BRAKE ARM, ZT3400
0330	5104055	2	E-CLIP, BRAKE ARM, ZT3100 & ZT3400
0340	5025011X24	4	BOLT, 5/16-18 X 3" GD5 YZ
0350	5025013X20	4	BOLT, 3/8-16 X 2-1/2" GD5 CZ
0360	5025392	8	NUT, 5/16-18 HEX NYLOCK FLANGE NUT
0370	5025155	8	WASHER, 5/16" SAE
0410	5025391	8	NUT, 1/4-20 Hex Nylock Flange
0420	5025211	2	PIN, HAIR, .0585 X 1-1/8, 1/4 EYE, YZ
0440	5025126	2	NUT, 1/4-20 HEX SERR. FLANGE
0450	5025288	2	WASHER, 1/4" Fender
0460	80003518	4	BOLT,1/4-20X0.750,GR5,STD NECK,SQ,ZC/CL
0470	5025156	4	WASHER, 3/8 SAE
0480	5025394	4	NUT, 3/8 - 16 HEX NYLOCK FLANGE

Not For Reproduction

Copyright © Briggs & Stratton. All Rights reserved

Instrument Control Panel Group

Note: Unless noted otherwise, use the standard torque specifications

Mfg. No: 5901907

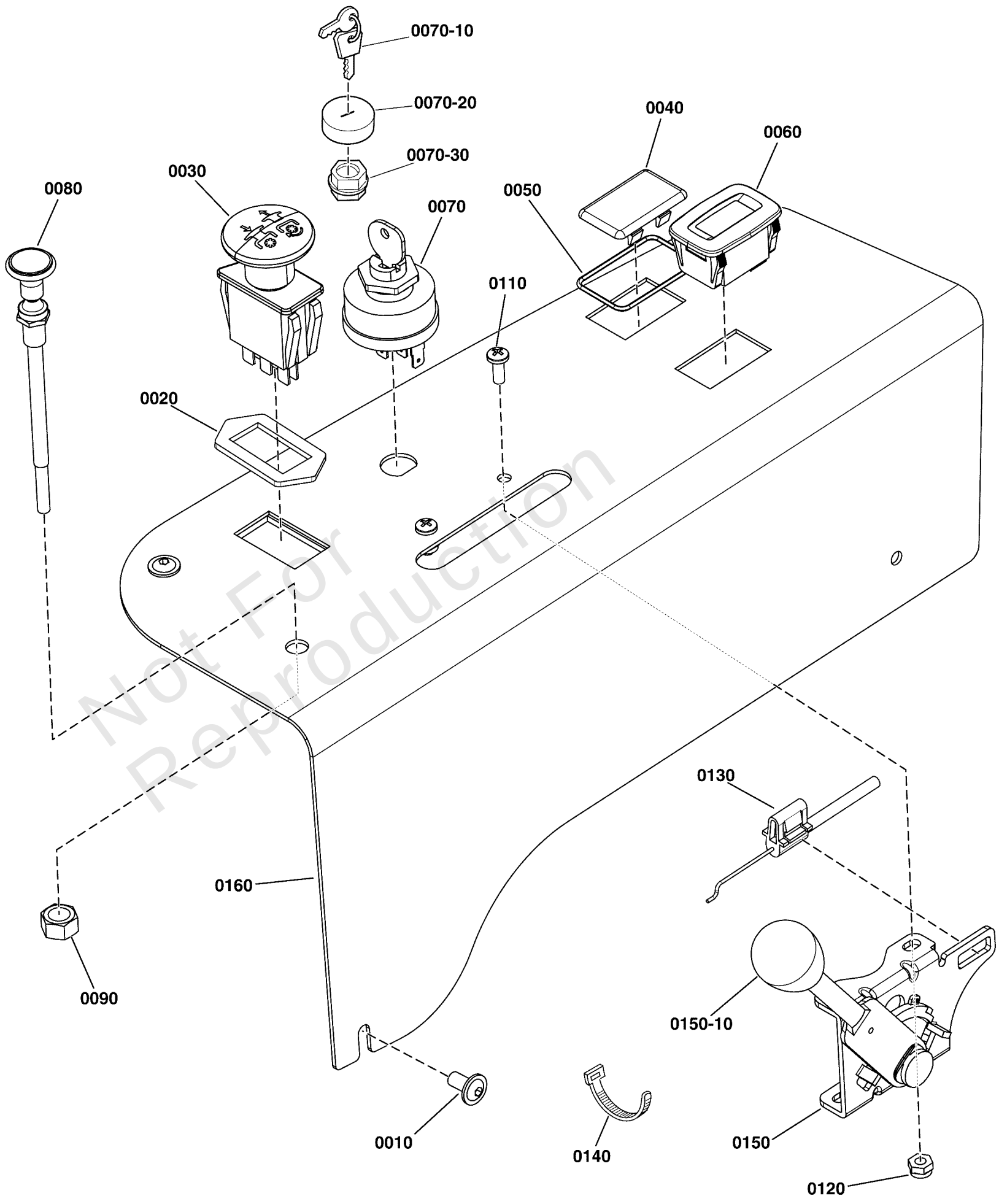

Not For Reproduction

Copyright © Briggs & Stratton. All Rights reserved

Instrument Control Panel Group

REF NO	PART NO	QTY	DESCRIPTION
0010	5025299X4	3	SCREW, ALLEN HEAD 1/4-20X.500 ZINC PHOS
0020	5022222	1	RING, SWITCH RETAINER
0030	1722887	1	SWITCH-PTO PUSH
0040	1709188	1	PLUG, .820X1.44 HOLE, BLACK PLASTIC
0050	5022269	1	O-RING, 7/8" ID X 1/16" W
0060	84008768	1	HOURMETER -(Replaces hour meters equipped with two individual wires)
0060	84008510	1	HOURMETER -(Replaces hour meters equipped with 6 pin connectors)
0070	5020927	1	SWITCH, IGNITION, 6 POST
0070-10	5022789	1	KEY, IGNITION MOLDED SET -(SV)
0070-20	5022790	1	COVER, PLASTIC, SNAP ON -(SV)
0070-30	5022791	1	PLASTIC NUT -(SV)
0080	5047779	1	CABLE, CHOKE CONTROL, 51" (Z)
0090	5025309	1	NUT, 3/8-24 Hex Jam
0110	5025179X6	2	SCREW, #10-24 X 3/4" ROUND PHILLIPS
0120	5025271	2	NUT, Hex, Nylon Lock, #10-24
0130	5101073	1	CABLE, THROTTLE, 42"
0140	5021030	2	TIE, SELF-LOCKING, 6"
0150	5101537	1	LEVER, THROTTLE CONTROL, HEAVY-DUTY
0150-10	5046360X1	1	THROTTLE CONTROL HANDLE/KNOB -(SV)
0160	5410303A	1	PLATE, CONTROL PANEL, IS600Z - BLK

Not For Reproduction

Copyright © Briggs & Stratton. All Rights reserved

Main Frame & Front Suspension Group

Note: Unless noted otherwise, use the standard torque specifications

Mfg. No: 5901907

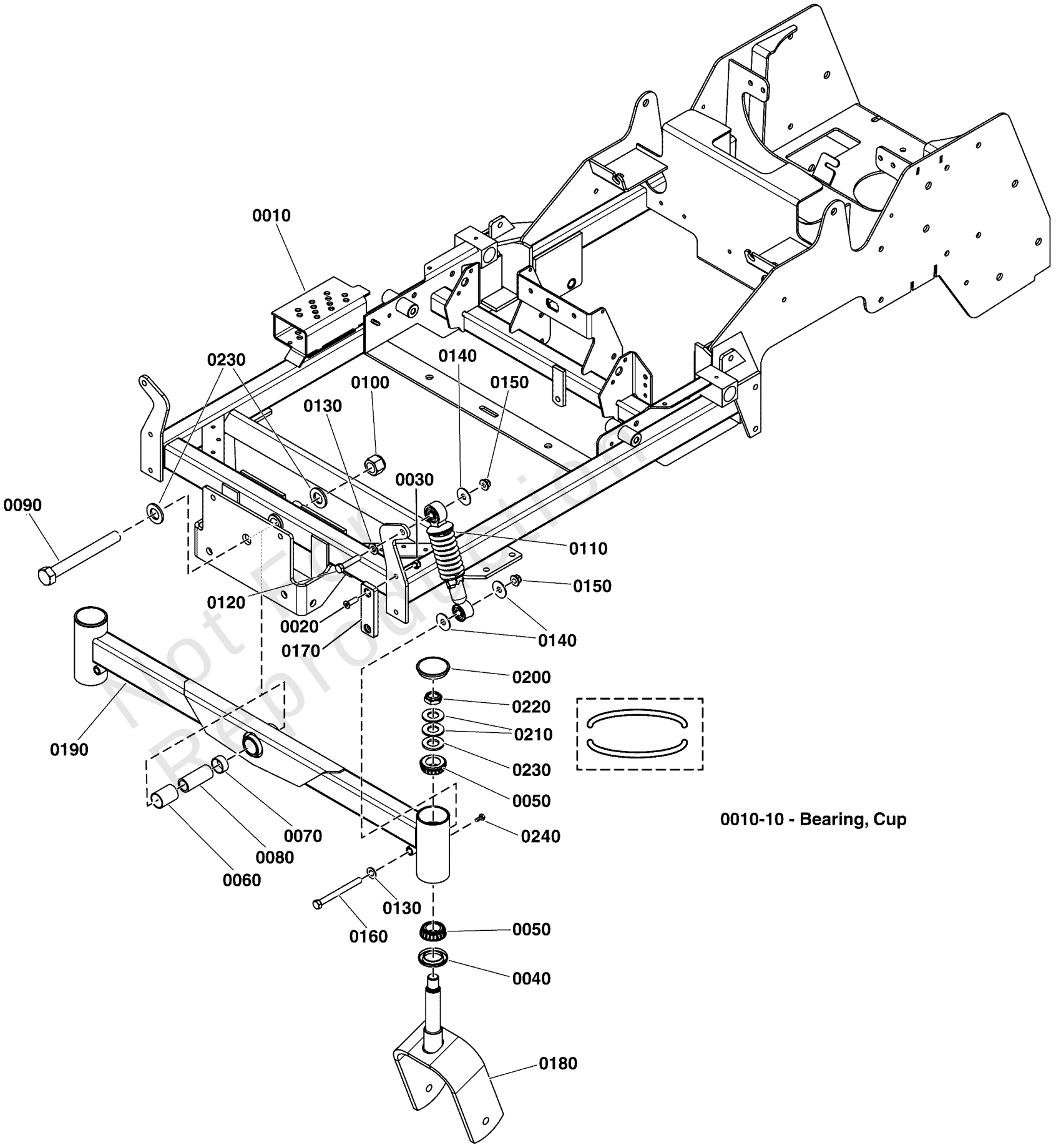

0010-10 - Bearing, Cup

Not for production Reproduction

Copyright © Briggs & Stratton. All Rights reserved

Main Frame & Front Suspension Group

REF NO	PART NO	QTY	DESCRIPTION
0010	-----	1	WELD, MAIN FRAME, 600Z - RED -(Refer to Note: *)
0010-10	5020883	1	CUP, BEARING (SV) -(SV)
0020	5025594	4	SCREW, 5/16-18 X 1, PHILLIPS HD, BZ
0030	5025057	4	NUT, Hex, Nylon Locking, 5/16-18
0040	5021072	2	SEAL, GREASE
0050	5020884	4	BEARING, TAPERED ROLLER, 1"
0060	5022852	1	PIVOT BEARING, 1.00" X 1.125" OD X 1.50"
0070	5100358	1	PIVOT BEARING, 1.00" X 1.125" OD X .50"
0080	5047489	1	SPACER, .75 x 1.00 x 2.38
0090	5025265X52	1	BOLT, 3/4-16 X 6-1/2" YZ GD5
0100	5025284	1	NUT, Hex, Nylon Lock, 3/4-16
0110	5023483	2	SHOCK & SPRING ASSEMBLY
0120	5025013X14	2	BOLT, 3/8-16 X 1-3/4" GD5 CZ
0130	5025156	4	WASHER, 3/8 SAE
0140	5025165	6	WASHER, 3/8" Fender
0150	5025394	4	NUT, 3/8 - 16 HEX NYLOCK FLANGE
0160	5025013X32	2	BOLT, 3/8-16 X 4" GD5 CZ
0170	5102702	2	PAD, FRICTION, .375 X 1.25 X 4.00
0180	5402208B	2	WELD, CASTER YOKE - RED MODEL -(S/N: 4000771923 and below)
0180	5419196B	2	WELD, CASTER YOKE - RED -(S/N: 4000771924 and above)
0190	5417067B	1	WELD, FRONT PIVOT - RED
0200	5109845	2	CAP, GREASE, LOW PROFILE
0210	5025449	4	WASHER, BELLEVILLE - 1.500 X .755
0220	5025448	2	NUT, 3/4-16, HEX JAM NYLON LOCK
0230	5025160	4	WASHER, 3/4 SAE
0240	5025457	2	BOLT, 1/4-28 X 1/2, GD5 YZ

Not For Reproduction

Footnotes:

Note: *If replacing contact the Service Department at 1-800-933-6175.

Copyright © Briggs & Stratton. All Rights reserved

Motion Control Group - Control System S/N: 4002340028 and Below

Note: Unless noted otherwise, use the standard torque specifications

Mfg. No: 5901907

Left hand side components shown.
Unless otherwise noted right hand side components are identical.

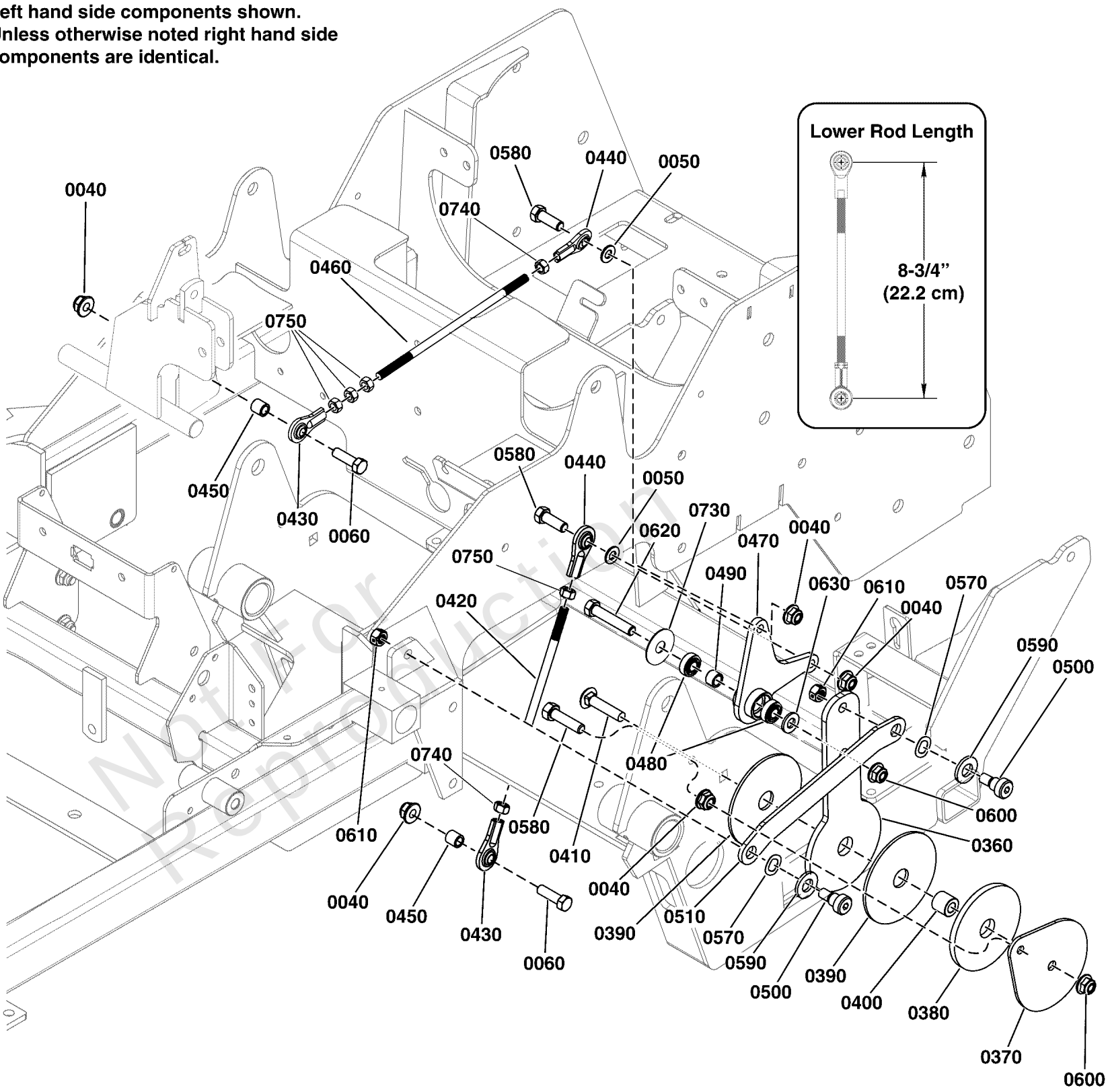

Not for Reproduction

Motion Control Group - Control System S/N: 4002340028 and Below

REF NO	PART NO	QTY	DESCRIPTION
0040	5025392	10	NUT, 5/16-18 HEX NYLOCK FLANGE NUT
0050	5025155	4	WASHER, 5/16" SAE
0060	5025011X12	4	BOLT, 5/16-18 X 1-1/2" GD5 YZ
0360	5410268	2	PLATE, CONTROL SYSTEM ARM - HT
0370	5410271A	2	PLATE, CONTROL SYSTEM LOCK - BLK
0380	5103704	2	PAD, .77 X 3.50 X .25, POLYURETHANE
0390	5103672	4	PAD, CONTROL SYSTEM
0400	5103705	2	SPACER, .39 X .75 X .69, PM, CZ
0410	5025146X12	2	BOLT, 3/8-16 X 1-1/2, CARRIAGE, GD5, CZ
0420	5103674	2	ROD, 5/16 X 7.00, LH-RH, CZ
0430	5104578	4	BALL JOINT 5/16-24 RH FEMALE STAMPED STL
0440	5104579	4	BALL JOINT 5/16-24 LH FEMALE STAMPED STL
0450	5102148	4	SPACER, .33 X .50 X .50, YZ
0460	5103673	2	ROD, 5/16 X 8.38, LH-RH, CZ
0470	5103718	2	PIVOT, CONTROL SYSTEM, S125XT
0480	5102003	4	BEARING, .375" ID X .875" OD X .341" THK
0490	5103676	2	SPACER, .39 X .55 X .38, PM, CZ
0500	5025356	4	BOLT, 3/8-16 X 3/8", 1/2" SHOULDER
0510	5410270AYP	2	LINK, Control
0570	5103784	4	WAVE WASHER, 1/2"ID X 087"OD X .01 THK.
0580	5025055X10	6	BOLT, 5/16-18 X 1-1/4 GD5 TFL, CZ
0590	5025440	4	WASHER, 1/2" GD9 YZ
0600	5025394	4	NUT, 3/8 - 16 HEX NYLOCK FLANGE
0610	5025100	4	NUT, Hex, Side Lock, 3/8-16
0620	5025013X16	2	BOLT, 3/8-16 X 2, GD5, CZ
0630	5025293	2	WASHER, 3/8" GR. 9 FLAT
0730	5025165	2	WASHER, 3/8" Fender
0740	5023212	4	NUT, 5/16-24 HEX, LH
0750	5025033	8	NUT, Hex, 5/16-24

Not For Reproduction

Copyright © Briggs & Stratton. All Rights reserved

Motion Control Group - Handles & Dampeners

Note: Unless noted otherwise, use the standard torque specifications

Mfg. No: 5901907

Left hand side components shown.
Unless otherwise noted right hand side components are identical.

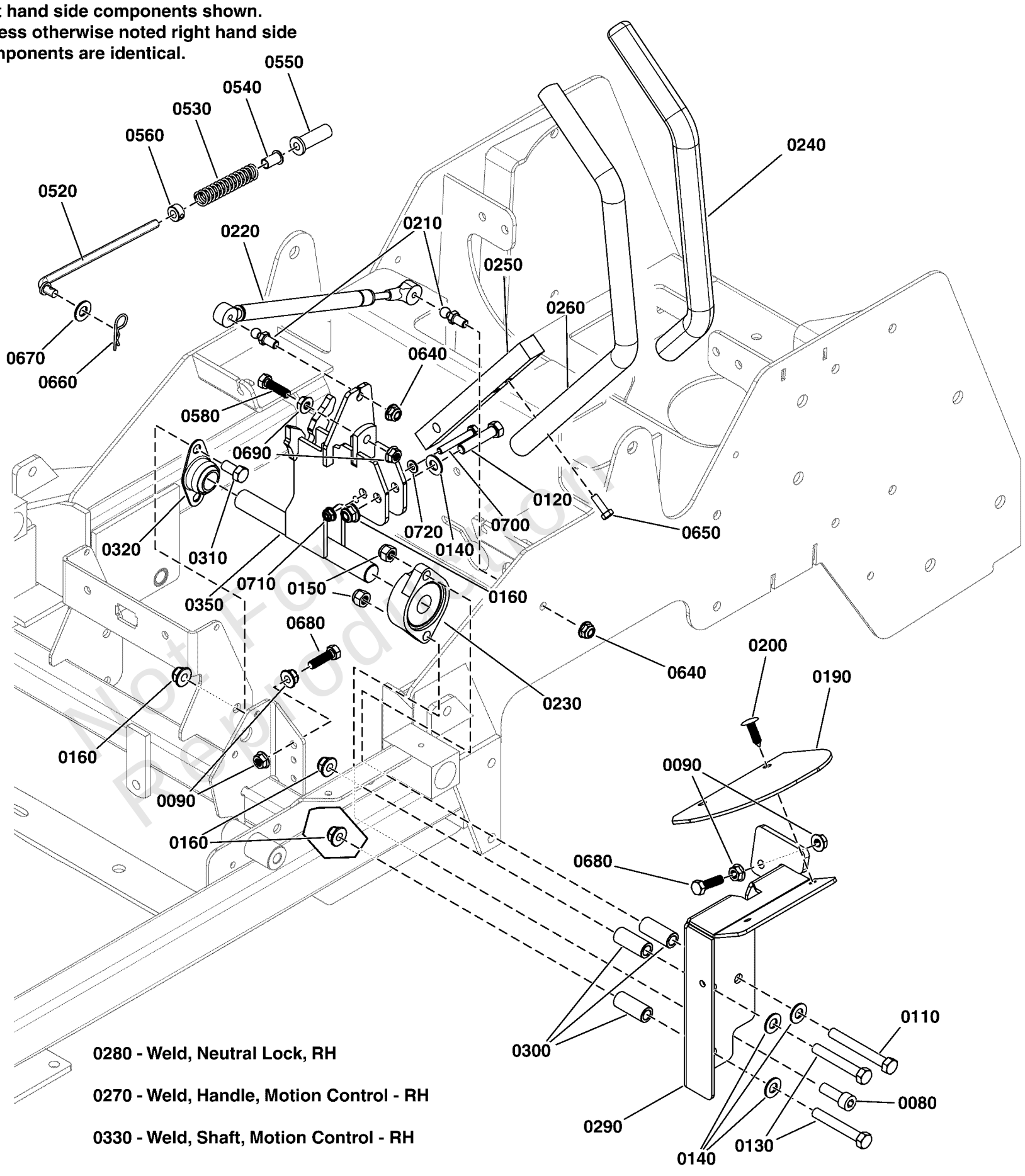

0280 - Weld, Neutral Lock, RH

0270 - Weld, Handle, Motion Control - RH

0330 - Weld, Shaft, Motion Control - RH

Not for Reproduction

Motion Control Group - Handles & Dampeners

REF NO	PART NO	QTY	DESCRIPTION
0080	5025327	2	BOLT, Allen Head, 3/8-16 x 1-1/4
0090	5025127	8	NUT, 5/16-18 HEX SERRATED FLANGE (SMALL)
0110	5025013X24	2	BOLT, 3/8-16 X 3" GD5 CZ
0120	5025013X14	2	BOLT, 3/8-16 X 1-3/4" GD5 CZ
0130	5025013X20	4	BOLT, 3/8-16 X 2-1/2" GD5 CZ
0140	5025156	8	WASHER, 3/8 SAE
0150	5025096	4	NUT, 3/8-16 HEX NYLON LOCK
0160	5025394	10	NUT, 3/8 - 16 HEX NYLOCK FLANGE
0190	5100948	2	GUARD, RUBBER MOT CTRS - IS500Z
0200	5025431	4	PUSH RIVET (TREE TYPE), BLACK
0210	5100941	4	BALL STUD, 5/16 X .50,# PC-477-2)
0220	5100940	2	DAMPENER, CONTROL,#(P6709/P3610)
0230	5021499	2	BEARING, FLANGE
0240	5104722	2	GRIP, FOAM, 1" ID, 16" LONG
0250	5047004A	2	MOUNT, CONTROL ARM - BLK
0260	5414431A	1	WELD, HANDLE MOTION CNTRL, 19.0, 1.0, LH - BLK
0270	5414432A	1	WELD, HANDLE MOTION CNTRL, 19.0, 1.0, RH - BLK
0280	5416051A	1	WELD, NEUTRAL LOCK - RH - BLK
0290	5416052A	1	WELD, NEUTRAL LOCK - LH - BLK
0300	5048264	6	SPACER, .39 X .63 X 1.50, CZ
0310	5025013X6	4	BOLT, 3/8-16 X 3/4" GD5 CZ
0320	5021098	2	BEARING, BRONZE FLANGE, 3/4"
0330	5415891A	1	WELD, SHAFT MOTION CONTROL, RH - BLK
0350	5415890A	1	WELD, SHAFT MOTION CONTROL, LH - BLK
0520	5100947	2	ROD, NEUTRAL RETURN, CZ
0530	5022645	2	SPRING, REVERSE RETURN
0540	5023260	2	BUSHING, FLANGE 3/8ID X 7/8 LONG
0550	5104375	2	FLANGED BUSHING, 3/8IDX.63ODX.8125FL
0560	5010546	2	COLLAR, 3/8" Set
0580	5025055X10	2	BOLT, 5/16-18 X 1-1/4 GD5 TFL, CZ
0640	5025392	4	NUT, 5/16-18 HEX NYLOCK FLANGE NUT
0650	80003531	4	SCREW, 5/16-18x0.750, GR5, WHIZ-LOCK, ZC
0660	5025210	2	3/32 X 1-5/8 HAIR PIN CLIP
0670	5025156	2	WASHER, 3/8 SAE
0680	5025055X14	4	BOLT, 5/16-18 X 1-3/4 TFL, GD5 YZ
0690	5025139	4	NUT, 5/16-18 HEX SERRATED FLANGE (LARGE)
0700	5025010X14	2	BOLT, 1/4 X 20 X 1-3/4 GD5 YZ
0710	5025391	2	NUT, 1/4-20 Hex Nylock Flange
0720	5025154	2	WASHER, 1/4 SAE

Not For Reproduction

Copyright © Briggs & Stratton. All Rights reserved

Parking Brake Group

Note: Unless noted otherwise, use the standard torque specifications

Mfg. No: 5901907

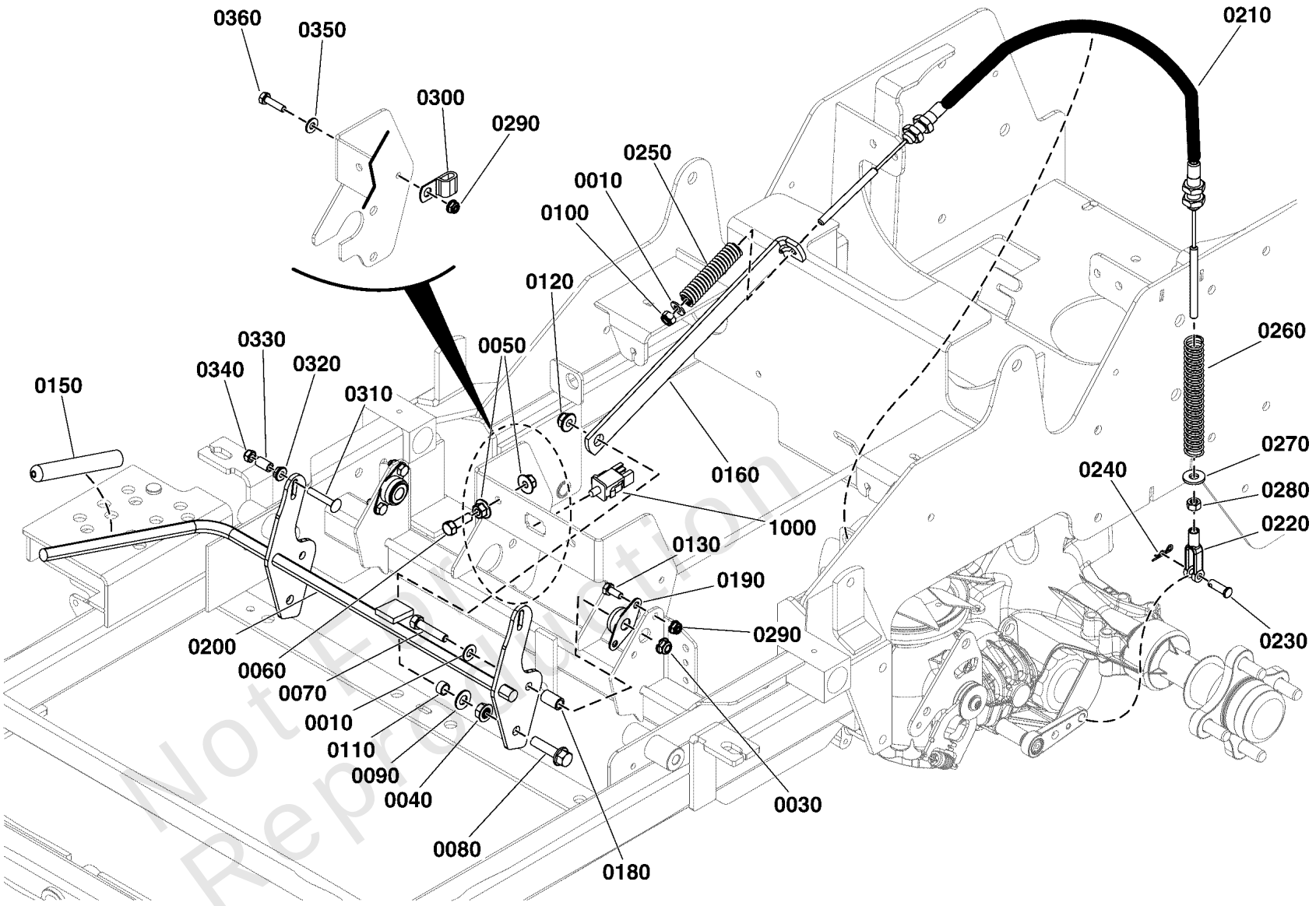

Not For Reproduction

Copyright © Briggs & Stratton. All Rights reserved

Parking Brake Group

REF NO	PART NO	QTY	DESCRIPTION
0010	5025155	2	WASHER, 5/16" SAE
0030	5025392	2	NUT, 5/16-18 HEX NYLOCK FLANGE NUT
0040	5025128	2	NUT, 3/8-16 Hex Large Serrated Flange
0050	5025139	2	NUT, 5/16-18 HEX SERRATED FLANGE (LARGE)
0060	5025011X9	1	BOLT, 5/16-18 X 1-1/8 GD5 CZ
0070	5025011X12	2	BOLT, 5/16-18 X 1-1/2" GD5 YZ
0080	5025390X12	2	BOLT, 3/8-16 X 1-1/2, FLANGE, GD 5, CZ
0090	5025156	2	WASHER, 3/8 SAE
0100	5025045	2	NUT, 5/16-24 HEX NYLON LOCK
0110	5041930	2	SPACER, .38 X .50 X .27, CZ
0120	5025394	2	NUT, 3/8 - 16 HEX NYLOCK FLANGE
0130	-----	4	HHCS, 1/4-20 X 0.625, GR5, ZINC/CLEAR
0150	5021880	1	GRIP, FOAM, .475 X 4.35 X .095
0160	5410328A	2	LINK, BRAKE LOCK, S125XT - BLK
0180	5103660	2	SPACER, .32 X .50 X .83, CZ
0190	5101123	2	BEARING, 1/2 FLANGED, PLASTIC BALL
0200	5415910A	1	WELD, BRAKE SHAFT, 700 - BLK
0210	5104276	2	CABLE, PARKING BRAKE, 31" (787.9 MM)
0220	5100301	2	CLEVIS, 5/16-18, 5/16" PIN HOLE, STEEL
0230	5025213X8	2	PIN, CLEVIS, 5/16 X 1, PLATED
0240	5025211	2	PIN, HAIR, .0585 X 1-1/8, 1/4 EYE, YZ
0250	5023242	2	SPRING-COMP, .496ID X 3.00LG X .112WR
0260	5021494	2	SPRING-COMP, .600ID X 5.50LG X .080WR
0270	5025337	2	WASHER, 5/16" USS
0280	5025032	2	NUT, 5/16-18 HEX
0290	5025391	5	NUT, 1/4-20 Hex Nylock Flange
0300	5025430	1	CLAMP, 5/16", DOUBLE, WIRE & TUBE
0310	80003564	2	BOLT, 1/4-20 X 1.500, GR5, SQ, ZINC/CLEAR
0320	5025126	2	NUT, 1/4-20 HEX SERR. FLANGE
0330	5041483	2	SPACER, .52 X .38 X .63, CZ
0340	5025095	2	NUT, 1/4-20 HEX NYLON LOCK
0350	5025154	1	WASHER, 1/4 SAE
0360	5025010X6	1	BOLT, 1/4"-20 X 3/4" GD5 YZ
1000	-----	1	Refer to: Electrical Group

Not For Reproduction

Copyright © Briggs & Stratton. All Rights reserved

Rear Bumper and ROPS Group - Models with Folding Roll Bars

Note: Unless noted otherwise, use the standard torque specifications

Mfg. No: 5901907

IMPORTANT NOTE:
Contact the Service Department at 1-800-933-6175 for ROPS replacement parts. You must provide the serial number of the ROPS system.

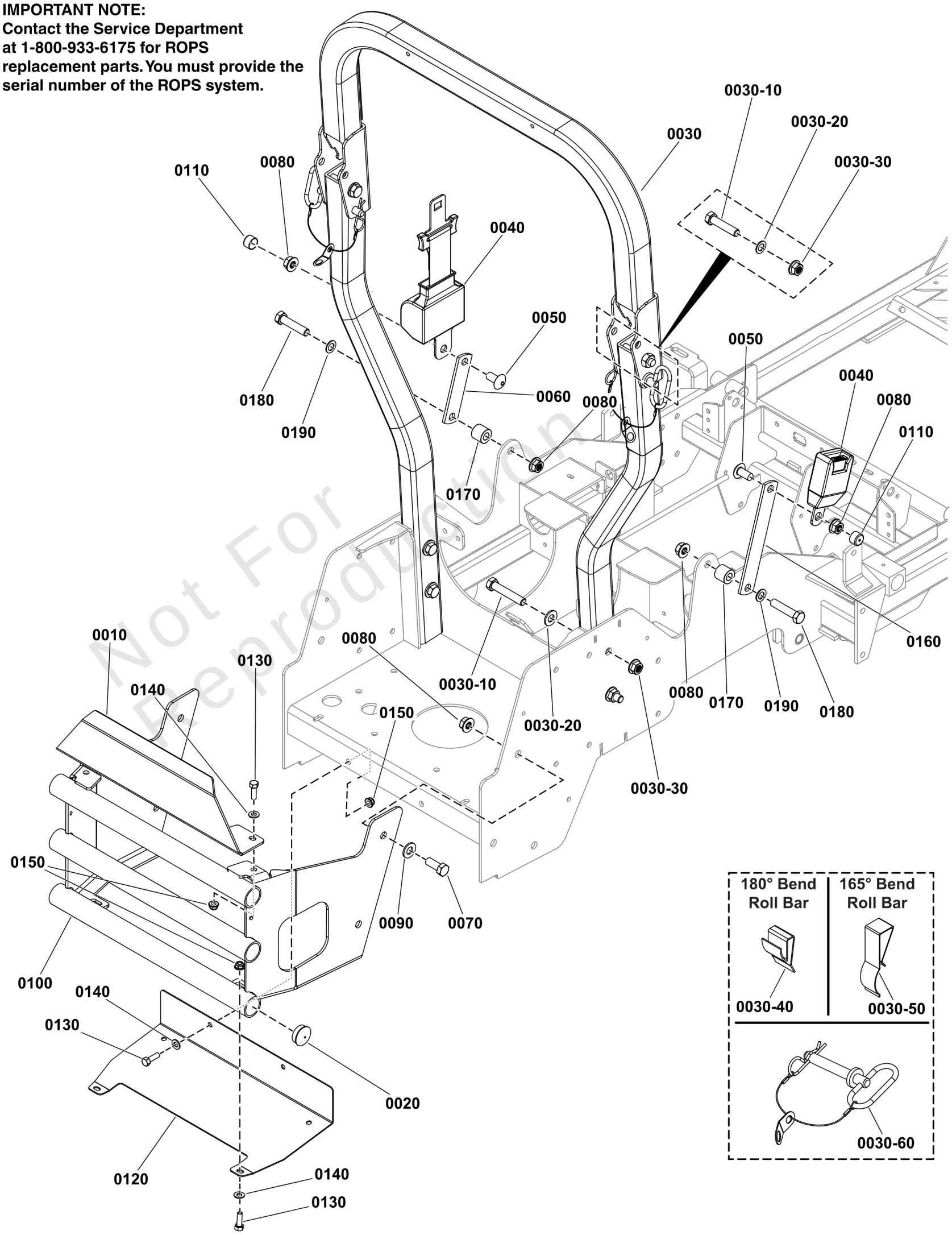

Not For Reproduction

Copyright © Briggs & Stratton. All Rights reserved

Rear Bumper and ROPS Group - Models with Folding Roll Bars

REF NO	PART NO	QTY	DESCRIPTION
0010	5410480B	1	PLATE, CARB PROTECTOR - RED
0020	5023484	6	PLUG, PANEL, 1.25 - BLACK
0030	-----	1	ROPS, FOLDING, IS600 -(Refer to Note: *)
0030-10	5025017X22	6	BOLT, 1/2-13 X 2-3/4 GD5 CZ
0030-20	5025158	6	WASHER, 1/2 SAE
0030-30	5025396	6	NUT, Hex Flange, Nylock, 1/2-13
0030-40	5103403X1YP	2	ANTI-RATTLE SPRING, FEMCO #230328972 (SV) -(180 Degree Bend Roll Bar)
0030-50	5105140X1YP	2	ANTI-RATTLE SPRING, ROPS, 165 DEGREE (SV) -(165 Degree Bend Roll Bar)
0030-60	5100013SM	2	PIN, HITCH, .50 X 3.2
0040	5100139	1	SEAT BELT, RETRACTING - ASSM - RED
0050	5100267	2	SCREW, 1/2 - 13 X 1.00 SCHS
0060	5401044A	1	EXTENSION, SEAT BELT - BLK
0070	5025017X8	4	BOLT, 1/2-13 X 1, GD5 YZ
0080	5025332	8	NUT, 1/2-13 Hex Side Lock
0090	5025158	4	WASHER, 1/2 SAE
0100	5418286B	1	WELD, BUMPER, IS600 - RED
0110	5101049	2	CAP, VINYL - .750 X .50 - BLK
0120	5418287A	1	PLATE, HEAT SHIELD - BLK
0130	5025011X8	6	BOLT, 5/16-18 X 1" GRD5 YZ
0140	5025292	6	WASHER, 5/16 GRADE 9, FLAT
0150	5025392	6	NUT, 5/16-18 HEX NYLOCK FLANGE NUT
0160	5416845A	1	BAR, SEAT BELT EXTENSION, 600Z - BLK
0170	5044673	2	SPACER, .52 X 1.00 X .88, PM, CZ
0180	5025017X18	2	BOLT, 1/2-13 X 2-1/4" GD5 CZ
0190	80003590	2	WASHER,.516IDX.875ODX.06,FLAT,ZC/CL

Not For Reproduction

Footnotes:

Note: *Contact the Service Department at 1-800-933-6175 for roll bar replacement parts. You must provide the serial number of the roll bar system.

Copyright © Briggs & Stratton. All Rights reserved

Rear Suspension Group

Note: Unless noted otherwise, use the standard torque specifications

Mfg. No: 5901907

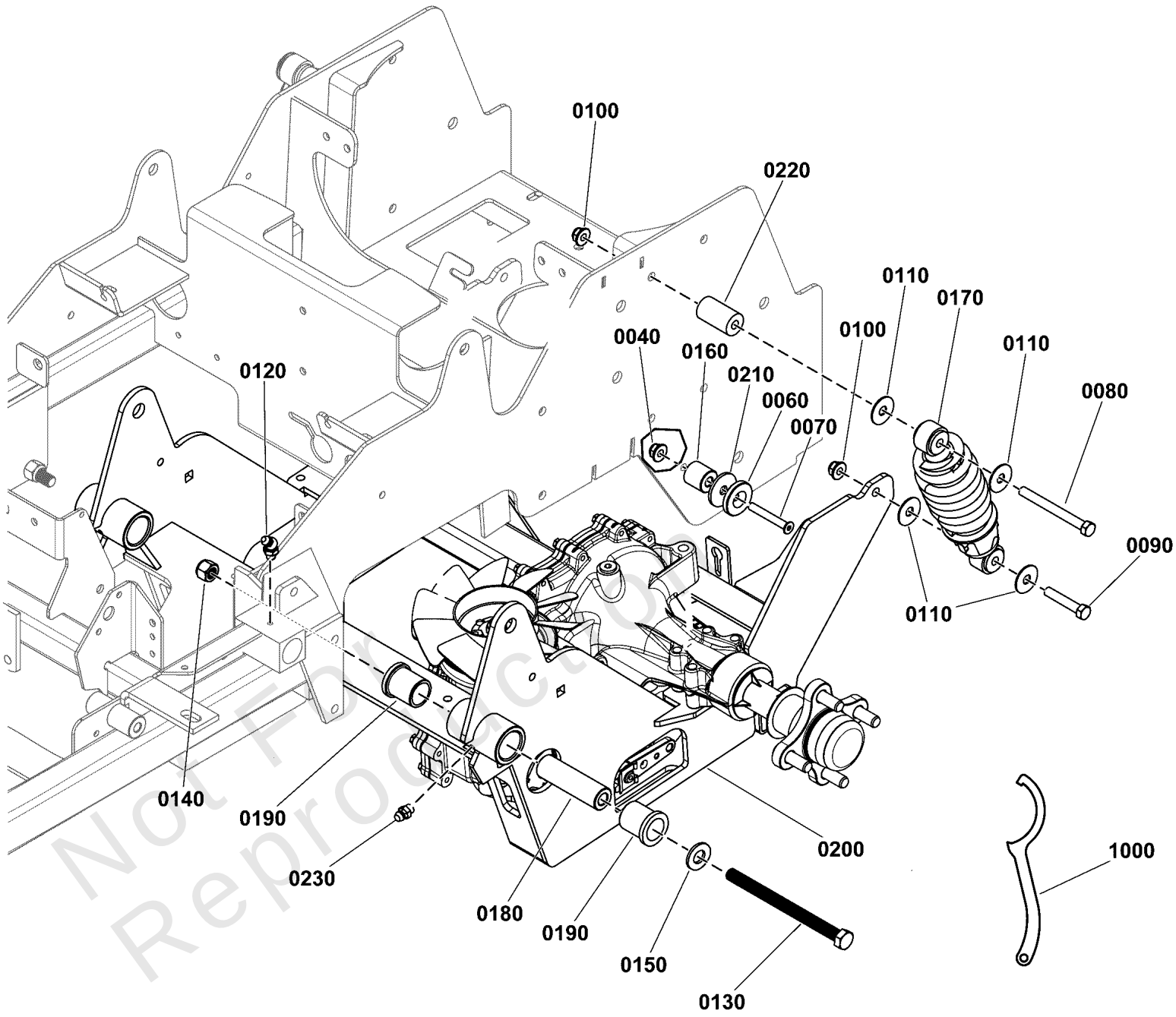

Not For Reproduction

Copyright © Briggs & Stratton. All Rights reserved

Rear Suspension Group

REF NO	PART NO	QTY	DESCRIPTION
0040	5025392	2	NUT, 5/16-18 HEX NYLOCK FLANGE NUT
0060	5102701	2	SPACER, .34 X 1.54 X .25 - UHMW
0070	5025303X12	2	SCREW, 5/16-18X1.5, FLAT HD SOC, CZ
0080	5025013X24	2	BOLT, 3/8-16 X 3" GD5 CZ
0090	80003522	2	HHCS, 3/8-16 X 2.00, GR5, ZINC/CLEAR
0100	5025394	4	NUT, 3/8 - 16 HEX NYLOCK FLANGE
0110	5025165	8	WASHER, 3/8" Fender
0120	5020020	2	GREASE FITTING, 1/4-28 45 DEGREE
0130	5025488X52	2	BOLT, 1/2-13 X 6-1/2" GD8 YZ
0140	5025056	2	NUT, 1/2-13 HEX NYLON LOCK
0150	5025158	2	WASHER, 1/2 SAE
0160	5046860	2	SPACER, .39 X 1.00 X .50, PM, CZ
0170	5103624	2	SHOCK ABSORBER, IS600
0180	5061339	2	SPACER, .52 X 1.00 X 3.42
0190	5021541	4	BUSHING, FLANGE
0200	84007761	1	CRADLE, Suspension
0210	5100548	2	WASHER, .390 X 1.50 X .109, YZ
0220	5100896	2	SPACER, .390 X 1.00 X 1.00 - YZ
0230	5020095	2	GREASE FITTING, 1/4-28 Straight
1000	5022853	1	WRENCH, SPANNER, CZ

Not For Reproduction

Copyright © Briggs & Stratton. All Rights reserved

Seat Mount & Floor Group S/N: 4000875837 to 4002340028

Note: Unless noted otherwise, use the standard torque specifications

Mfg. No: 5901907

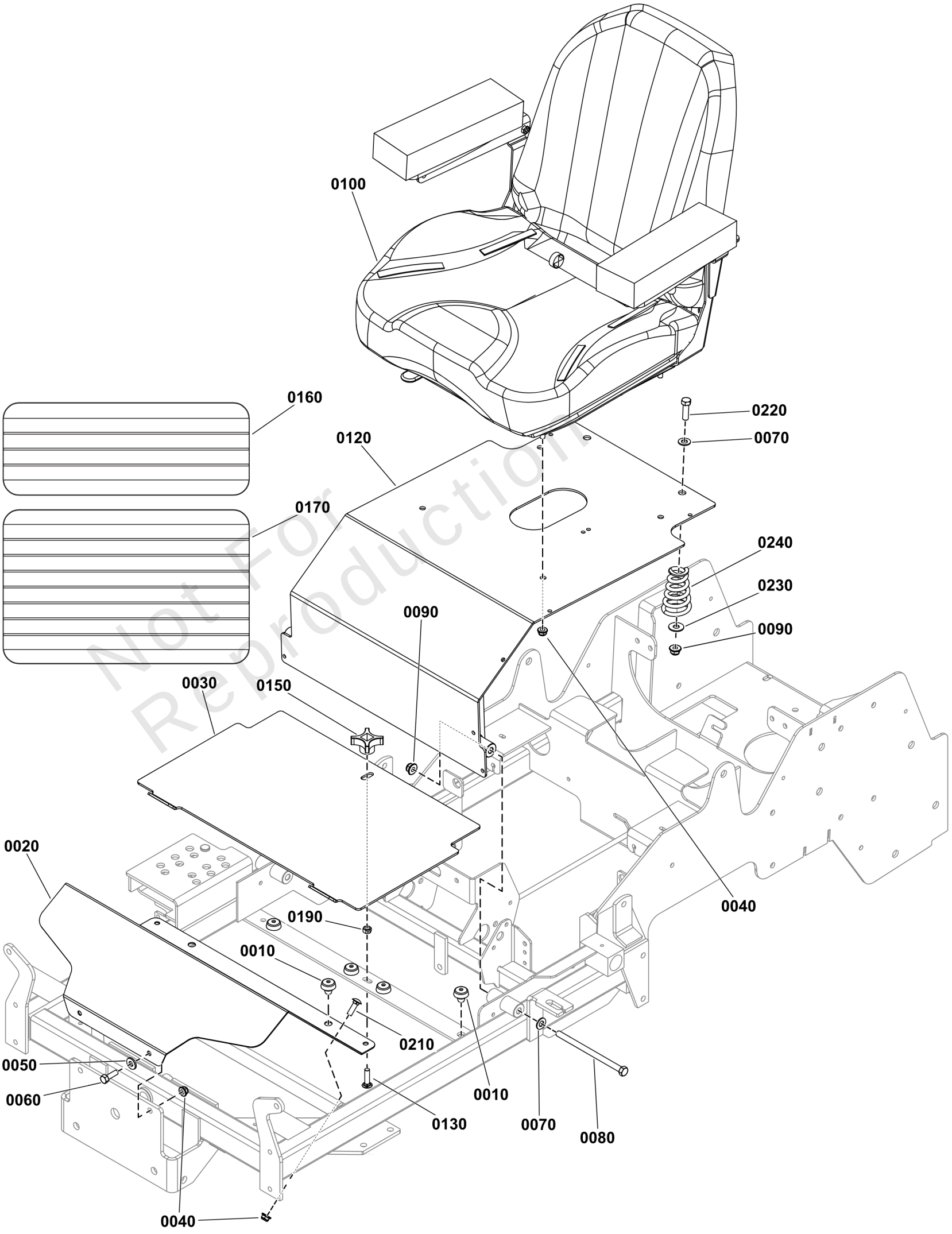

Not For Reproduction

Copyright © Briggs & Stratton. All Rights reserved

Seat Mount & Floor Group S/N: 4000875837 to 4002340028

REF NO	PART NO	QTY	DESCRIPTION
0010	197546	6	MNT, VBRTN, RBBR
0020	84007982	1	PLATE, Floor
0030	5410256B	1	PLATE, FLOOR PAN, REMOVABLE. IS600 - RED
0040	5025392	8	NUT, 5/16-18 HEX NYLOCK FLANGE NUT
0050	5025292	2	WASHER, 5/16 GRADE 9, FLAT
0060	5025011X8	2	BOLT, 5/16-18 X 1" GRD5 YZ
0070	5025156	4	WASHER, 3/8 SAE
0080	5025013X48	2	BOLT, 3/8-16 X 6" GD5 CZ
0090	5025394	4	NUT, 3/8 - 16 HEX NYLOCK FLANGE
0100	5108190	1	SEAT, 907, W/ARM REST & SWITCH, NO BEAD
0100-10	5104741X1	1	4" SL TRACK SET - 9" FLAT - W/HDWR -(SV)
0100-20	5108190X3	1	BACK ASSEMBLY -(SV)
0100-30	5108190X4	1	CUSHION ASSEMBLY -(SV)
0100-40	5108190X2	1	ARM BRACKET W/PAD & HARDWARE -(SV)
0100-50	5108190X1	1	ARM PAD ASSEMBLY -(SV)
0100-60	7023354	1	SWITCH, SEAT -(SV)
0100-70	5100541	1	SWITCH, NC, W/ TWIST-IN BASE -(SV)
0120	5601055	1	ASSM, SEAT PLATE W/DECALS, IS600Z-DOM (5415897B)
0130	5025145X10	1	BOLT, 5/16-18 X 1-1/4, CARRIAGE, GD5, CZ
0150	1670578	1	KNOB-INT THR .312-18 4-ARM 2.12WD 1.06LG
0160	5101374	1	SAFETY WALK, FLOOR REST, 16.00 X 6.00
0170	5101333	1	SAFETY WALK, FLOOR PLATE, S50X, 10X17.13
0190	80003675	1	NUT, 5/16-1/8, HEX, CNTR LK, ZINC PHOS/OIL
0210	5025145X8	2	BOLT, 5/16-18 X 1, CARRIAGE, GD5, CZ
0220	5025013X10	2	BOLT, 3/8-16 X 1-1/4" GD5 CZ
0230	5025401	2	WASHER, 3/8" USS
0240	5108276	2	SPRING, SEAT, BLACK E-COAT

Not For Reproduction

Copyright © Briggs & Stratton. All Rights reserved

Spindle SERVICE PARTS - 5061095

Note: Unless noted otherwise, use the standard torque specifications

Mfg. No: 5901907

5061095

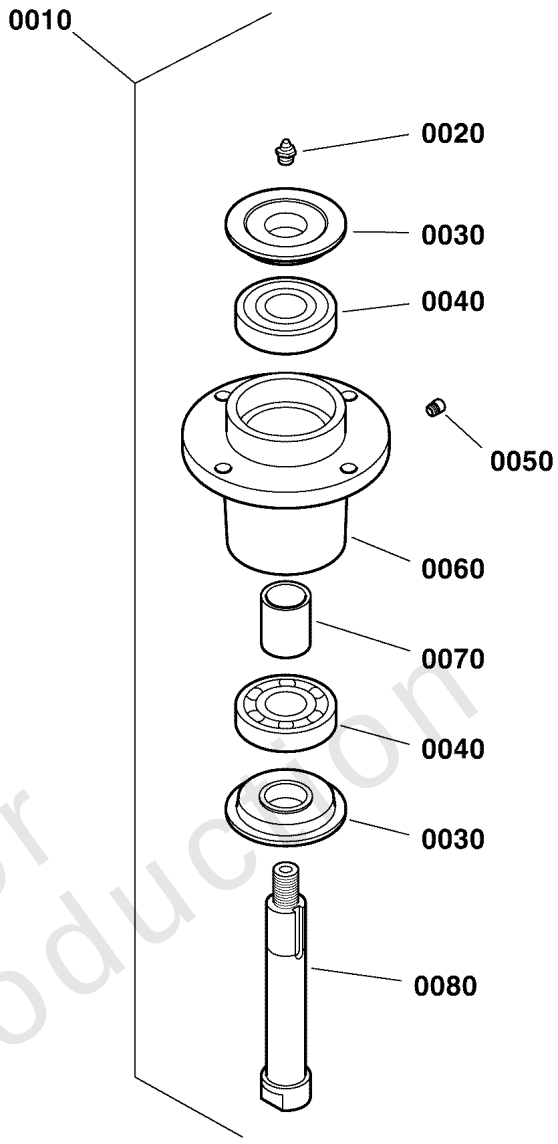

Not For Reproduction

Copyright © Briggs & Stratton. All Rights reserved

Spindle SERVICE PARTS - 5061095

REF NO	PART NO	QTY	DESCRIPTION
0010	5061095	1	SPINDLE, ASSM, ALUMINUM - 5.25 -(Nut and Washer Sold Seperately) (Includes items #0020 - 0080)
0020	5023329	1	FITTING, 1/8 NPT STR, SHORT
0030	5049793	2	TRASH SHIELD
0040	5023330	2	BEARING, .98 X 2.44 X .67
0050	5023296	1	FITTING, RELIEF, 1-5 PSI
0060	5061097	1	HOUSING, SPINDLE
0070	5061099	1	SPACER, 1.00 X 1.25 X 1.75
0080	5061098	1	SPINDLE SHAFT

Not For Reproduction

Copyright © Briggs & Stratton. All Rights reserved

Transaxle Drive Group

Note: Unless noted otherwise, use the standard torque specifications

Mfg. No: 5901907

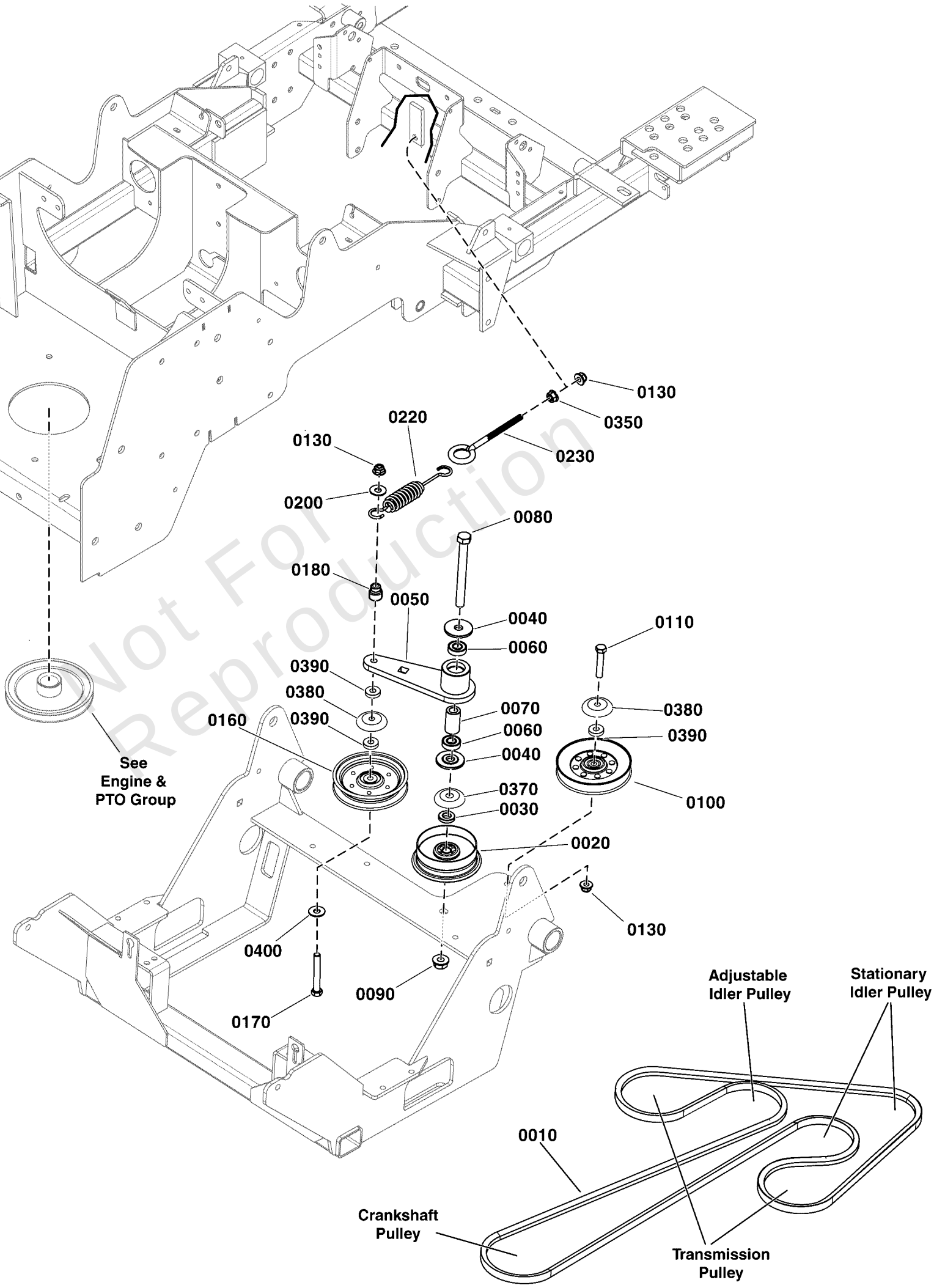

Not For Reproduction

Copyright © Briggs & Stratton. All Rights reserved

Transaxle Drive Group

REF NO	PART NO	QTY	DESCRIPTION
0010	5103885	1	BELT, A-SEC, 117.24" EL, WRAPPED, ARAMID
0020	5103618	1	PULLEY, IDLER, SINGLE FLG 4"OD X 1/2"ID
0030	5100520	1	SPACER, .52 X 1.00 X .22, PM, CZ
0040	5103262	2	SPACER, IDLER ARM, 1/2, PM
0050	5409891A	1	WELD, ARM, PUMP DRIVE IDLER - BLK
0060	7078243	2	BEARING, BALL, AXLE
0070	5103812	1	SPACER, .52 X .84 X 1.53, PM
0080	5025017X40	1	BOLT, 1/2-13 X 5" GD5 YZ
0090	5025396	1	NUT, Hex Flange, Nylock, 1/2-13
0100	5103717	1	PULLEY-IDLER-V, 4.85OB, .38ID, .94W,STL
0110	5025013X20	1	BOLT, 3/8-16 X 2-1/2" GD5 CZ
0130	5025394	3	NUT, 3/8 - 16 HEX NYLOCK FLANGE
0160	5103788	1	PULLEY, IDLER-V, 4.0 X .38, STL
0170	5025013X24	1	BOLT, 3/8-16 X 3" GD5 CZ
0180	5020923	1	SPACER, Shoulder
0200	5025401	1	WASHER, 3/8" USS
0220	5100632	1	SPRING-EXT, 1.25OD X 9.3LG X .142WR, BLK
0230	5023497	1	EYE BOLT, 3/8-16 X 5, 2.88THRD, 1EYE, CZ
0350	5025128	1	NUT, 3/8-16 Hex Large Serrated Flange
0370	5101103	1	SHIELD, PULLEY BEARING, CZ
0380	5103787	2	SHIELD, BEARING PULLEY, 3/8ID, CZ
0390	5044960	3	SPACER, .39 X 1.00 X .25, PM, CZ
0400	5025156	1	WASHER, 3/8 SAE

Not For Reproduction

Copyright © Briggs & Stratton. All Rights reserved

Note: Unless noted otherwise, use the standard torque specifications

Mfg. No: 5901907

Service Parts Schematic for Hydro-Gear® Transaxles:
ZJ-GYEF-8T7B-1GRX (5105086)
ZJ-KYEF-8T7C-14RX (5105085)

For components not listed see your authorized Hydro-Gear® service provider.

ITEMS NOT SHOWN
13 SEALANT
14 OIL, 20W50
200 SEAL KIT

PARTS INCLUDED IN 200 SEAL KIT:
10,30,31,33,35,41,56,57,71,103,
130,157

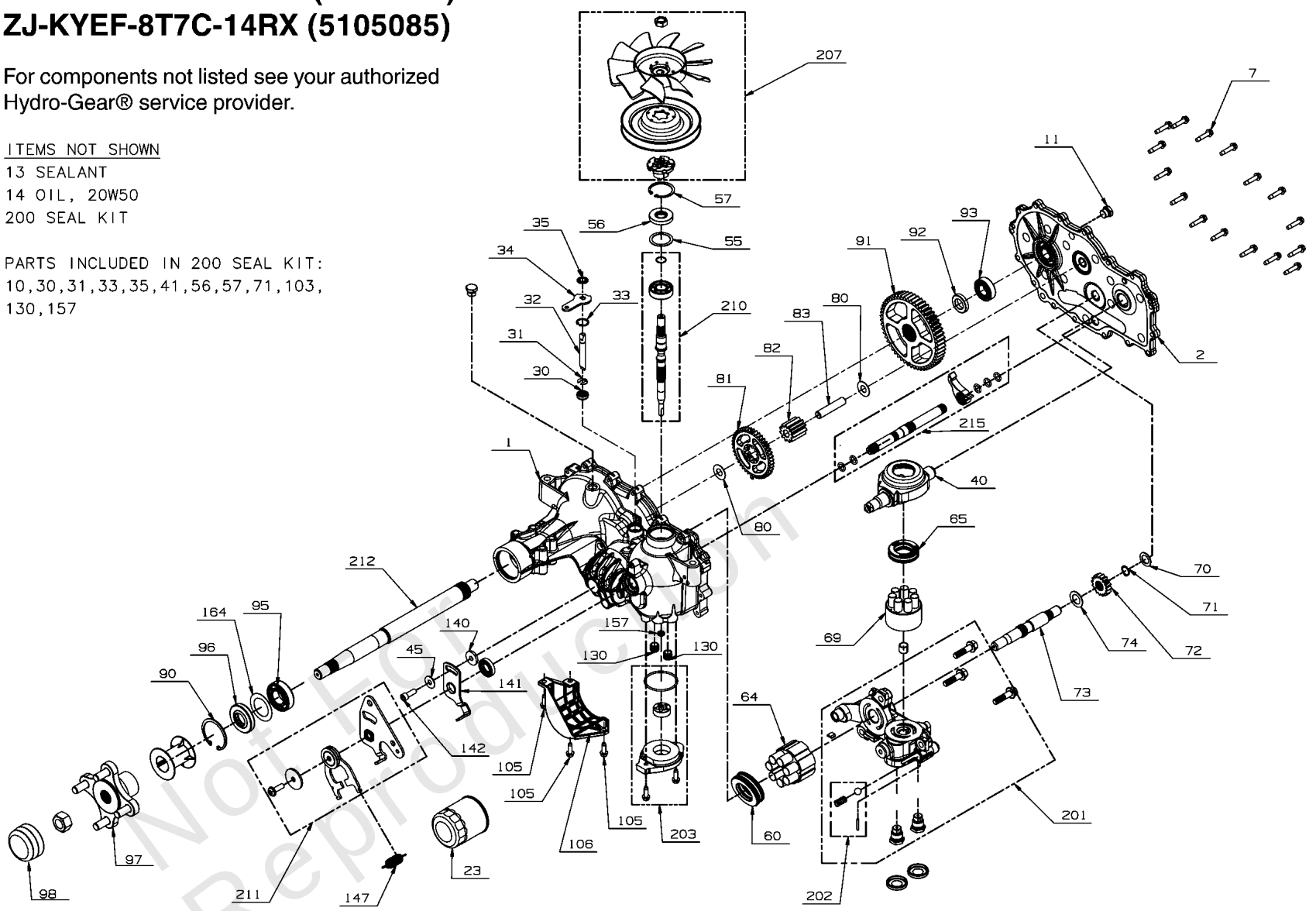

Not For Reproduction

Copyright © Briggs & Stratton. All Rights reserved

Transaxle SERVICE Parts - Hydro-Gear ZT3200

REF NO	PART NO	QTY	DESCRIPTION
1	-----	1	KIT, MAIN HOUSING, RH, CHRG, CNTRL
2	-----	1	KIT, SIDE COVER RH
7	-----	16	SCREW, HEX WASHER
11	-----	1	PLUG EXTERNAL HEX VENT 9/16-18
23	5101026X1	1	FILTER, OIL, ZT2800
30	-----	1	SEAL, LIP, .375 X .75 X .25
31	-----	1	BYPASS RETAINING RING 1
32	-----	1	ROD, BYPASS .375 X 2.88
33	-----	1	BYPASS RETAINING RING 2
34	-----	1	ARM, BYPASS
35	-----	1	RING, RETAINING .375 EXTERNAL
40	-----	1	SWASHPLATE, TRUNNION
41	-----	1	SEAL, LIP 10 X 32 X 7
45	-----	1	WASHER, .34X.88X.06
55	-----	1	WASHER, FLAT 1.23 X 1.57 X .04
56	5100161X3	1	OUTPUT SHAFT SEAL, 17X40X7, HR #51161
57	5101026X4	1	RING, RET 2.06 INT,
60	-----	1	BEARING, THRUST 35 x 62 x 18
64	-----	1	KIT, 16cc CYLINDER BLOCK ASSEMBLY
65	-----	1	BEARING, THRUST 30 x 52 x 13
69	-----	1	KIT, BLOCK 7 PISTON
70	-----	1	WASHER, .63 X 1.00 X .05 FLAT
71	-----	1	RETAINING RING, MOTOR SHAFT
72	-----	1	GEAR, 16T (STEEL)
73	-----	1	SHAFT, MOTOR
74	-----	1	WASHER, .71 X 1.16 X .04 FLAT
80	-----	2	WASHER, .51 X 1.00 X .03 FLAT
81	-----	1	GEAR, 43T
82	-----	1	GEAR, 11T (STEEL)
83	-----	1	PIN, JACKSHAFT
90	-----	1	RING, RETAINING 2.25 INTERNAL
91	-----	1	GEAR, 54T
92	-----	1	SPACER, .750 X 1.320 X .257
93	-----	1	KIT, BEARING
95	5101026X5	1	BEARING BALL, 1.0 X 52 X 15 OPEN 6205M
96	5103589X1	1	KIT, SEAL, AXLE - HG# 53699
97	5103589X8	1	ASSM, HUB
98	5103589X7	1	AXLE CAP,
105	-----	3	SCREW, HEX WASHER 1/4-20 X .75
106	-----	1	GUARD, FILTER, RH
130	-----	2	TUBE, CHARGE TRIPLE O-RING
140	-----	1	SPACER, .320X1.005X.179
141	-----	1	ARM, NEUTRAL RIGHT
142	-----	1	SHCS, 5/16-24 X .875 (PATCH)
147	-----	1	SPRING, EXTENSION
157	-----	1	KIT, GEROTOR SEAL
164	-----	1	WASHER, 1.355 x 2.035 x .021 FLAT
200	5101026X8	1	KIT SEAL
201	-----	1	KIT, CENTER SECTION, RH CHARGE
202	-----	1	KIT, CHARGE RELIEF
203	5105085X1	1	KIT, CHARGE

Not For Reproduction

Copyright © Briggs & Stratton. All Rights reserved

Note: Unless noted otherwise, use the standard torque specifications

Mfg. No: 5901907

Service Parts Schematic for Hydro-Gear® Transaxles:
ZJ-GYEF-8T7B-1GRX (5105086)
ZJ-KYEF-8T7C-14RX (5105085)

For components not listed see your authorized Hydro-Gear® service provider.

ITEMS NOT SHOWN
13 SEALANT
14 OIL, 20W50
200 SEAL KIT

PARTS INCLUDED IN 200 SEAL KIT:
10,30,31,33,35,41,56,57,71,103,
130,157

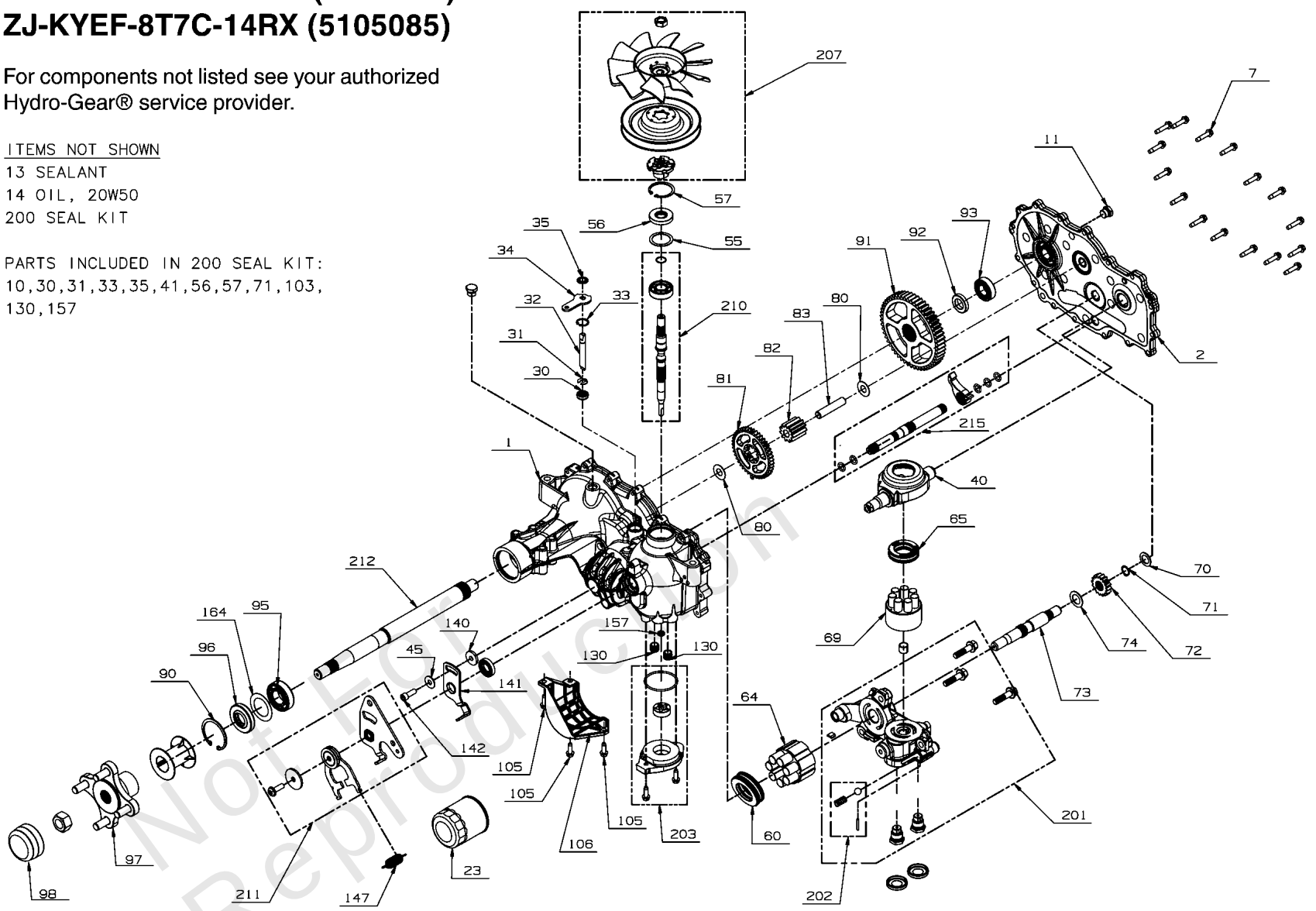

Not For Reproduction

Copyright © Briggs & Stratton. All Rights reserved

Transaxle SERVICE Parts - Hydro-Gear ZT3200

REF NO	PART NO	QTY	DESCRIPTION
207	5105085X2	1	KIT, FAN/PULLEY
210	-----	1	KIT, INPUT SHAFT
211	-----	1	KIT, RTN BIDIRECTIONAL
212	-----	1	SHAFT, AXLE
215	-----	1	KIT, OUTBOARD, RH ROT A / LH ROT B

Not For Reproduction

Copyright © Briggs & Stratton. All Rights reserved

Note: Unless noted otherwise, use the standard torque specifications

Mfg. No: 5901907

Front Wheels & Tires

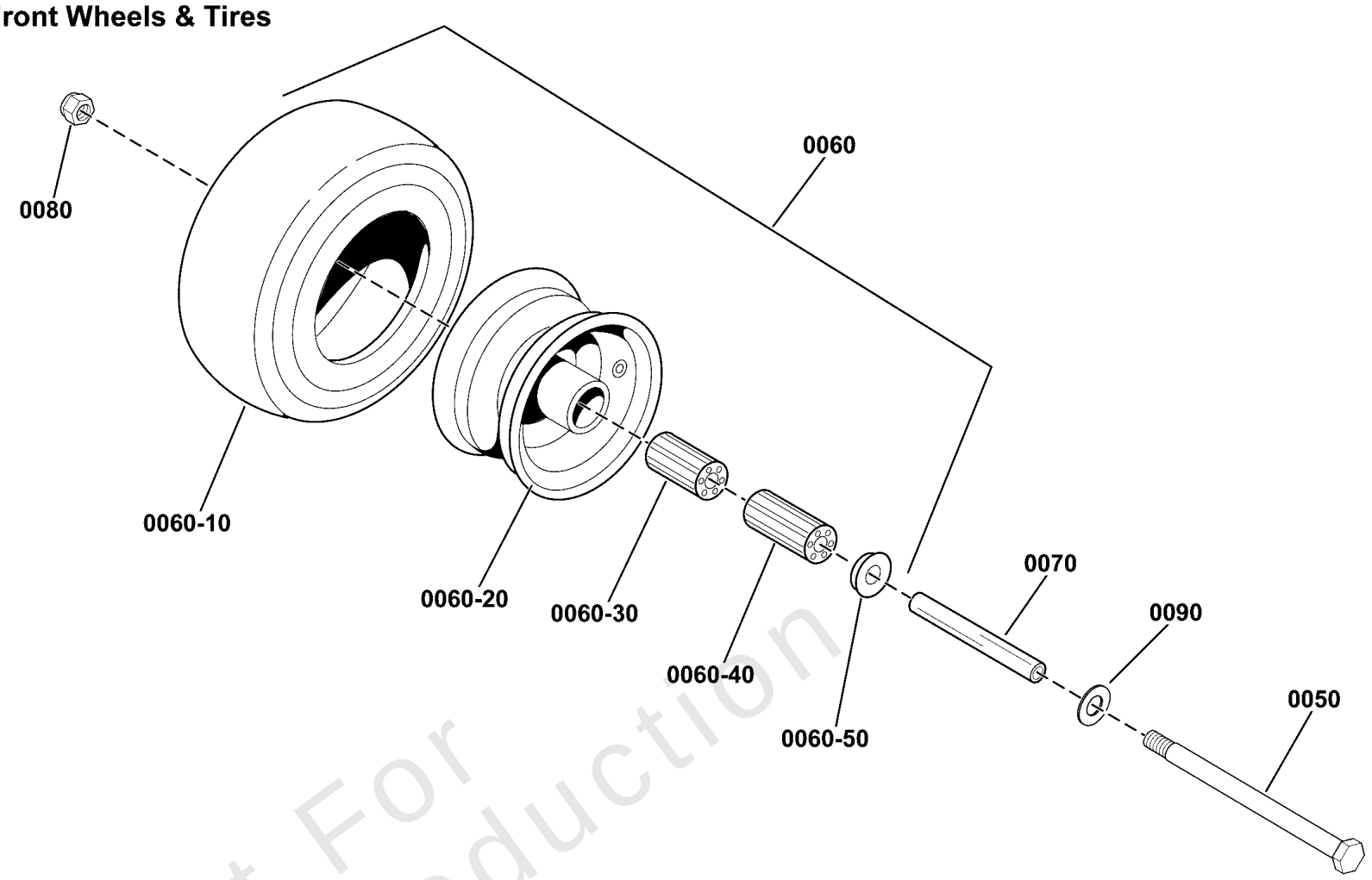

Rear Wheels & Tires

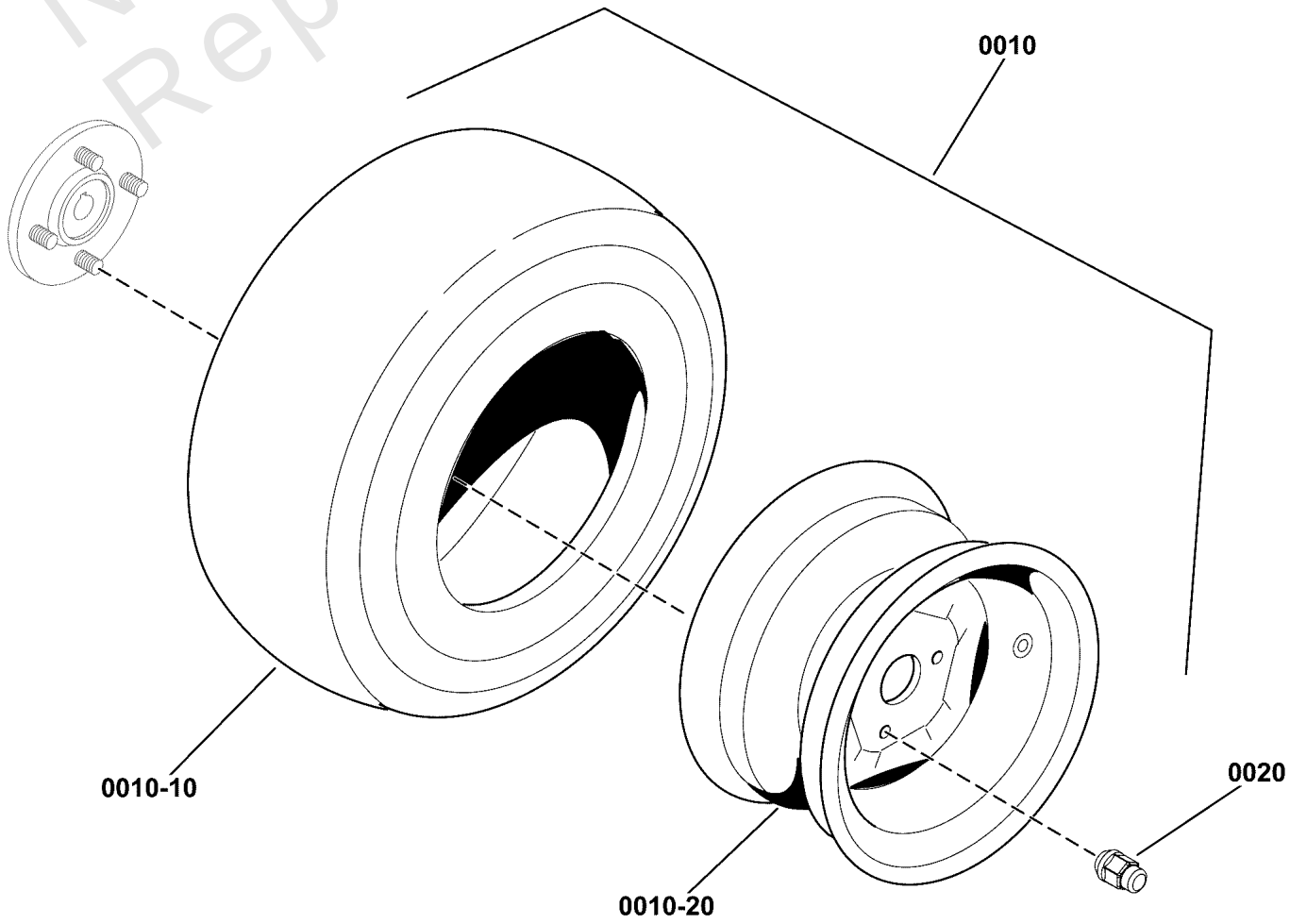

Not For Reproduction

Copyright © Briggs & Stratton. All Rights reserved

Wheel and Tire Group

REF NO	PART NO	QTY	DESCRIPTION
0010	84007890	2	TIRE ASSEMBLY (22 X 11 - 10)
0010-10	5023369X2	2	TIRE, 22 X 11.00 - 10, 4 PLY -(One per tire)
0010-20	-----	2	WHEEL RIM -(One per tire)
0020	-----	10	LUG NUT, Black -(Originally Black Lug nut - Replacement 5020601SM is silver in color).
0020	5020601SM	10	NUT, 1/2-20, FOR WHEEL BOLT SILVER -(Replacement 5020601SM is silver in color).
0050	5025017X72	2	BOLT, 1/2-13 X 9" GD5 YZ
0060	5109055	2	TIRE ASM, 13 X 6.5-6, RB, BLK, KENDA
0060-10	5022577	2	TIRE, RUBBER ONLY -(One per tire)
0060-20	-----	2	WHEEL RIM
0060-30	84008029	2	BEARING -(One per tire)
0060-40	5021182	2	BEARING, ROLLER 3/4" ID X 3.25" (ONE PER TIRE)(SV) -(One per tire)
0060-50	5021043	4	RETAINER, BEARING (TWO PER TIRE)(SV)
0070	5106587	2	CASTER AXLE SHAFT, .51"ID X .75"OD X7.16
0080	5025396	2	NUT, Hex Flange, Nylock, 1/2-13
0090	5025158	2	WASHER, 1/2 SAE

Not For Reproduction

Copyright © Briggs & Stratton. All Rights reserved

Hardware Identification & Torque Specifications

Torque Specification Chart

FOR STANDARD METRIC MACHINE HARDWARE (Tolerance ± 20%)

Property Class	5.6 Class 5.6		8.8 Class 8.8		10.9 Class 10.9		12.9 Class 12.9	
Size Of Hardware	*in/lbs* **ft/lbs**	Nm.	*in/lbs* **ft/lbs**	Nm.	*in/lbs* **ft/lbs**	Nm.	*in/lbs* **ft/lbs**	Nm.
M3	*5.88*	*.56*	*13.44*	*1.28*	*19.2*	*1.80*	*22.92*	2.15
M4	*13.44*	*1.28*	*30.72*	*2.90*	*43.44*	*4.10*	*52.56*	4.95
M5	*26.4*	*2.50*	*60.96*	*5.75*	**5.97**	*8.10*	**7.15**	9.7
M6	*44.64*	*4.3*	**7.3**	*9.9*	**10.3**	*14*	**12.1**	16.5
M7	**5.2**	*7.1*	**12.1**	*16.5*	**16.9**	*23*	**19.9**	27
M8	**7.7**	*10.5*	**17.7**	*24*	**25**	*34*	**29**	40
M10	**15**	*21*	**35**	*48*	**50**	*67*	**59**	81
M12	**26**	*36*	**61**	*83*	**86.2**	*117*	**103**	140
M14	**42**	*58*	**101**	*132*	**136**	*185*	**162**	220
M16	**64**	*88*	**147**	*200*	**210**	*285*	**250**	340
M18	**89**	*121*	**202**	*275*	**287**	*390*	**346**	470
M20	**126**	*171*	**290**	*390*	**405**	*550*	**486**	660
M22	**169**	*230*	**390**	*530*	**559**	*745*	**656**	890
M24	**217**	*295*	**497**	*375*	**708**	*960*	**840**	1140
M27	**320**	*435*	**733**	*995*	**1032**	*1400*	**1239**	1680
M30	**435**	*590*	**995**	*1350*	**1401**	*1900*	**1681**	2280
M33	**590**	*800*	**1349**	*1830*	**1902**	*2580*	**2278**	3090
M36	**759**	*1030*	**1740**	*2360*	**2441**	*3310*	**2935**	3980
M39	**988**	*1340*	**2249**	*3050*	**3163**	*4290*	**3798**	5150

The guides and ruler furnished below are designed to help you select the appropriate hardware.

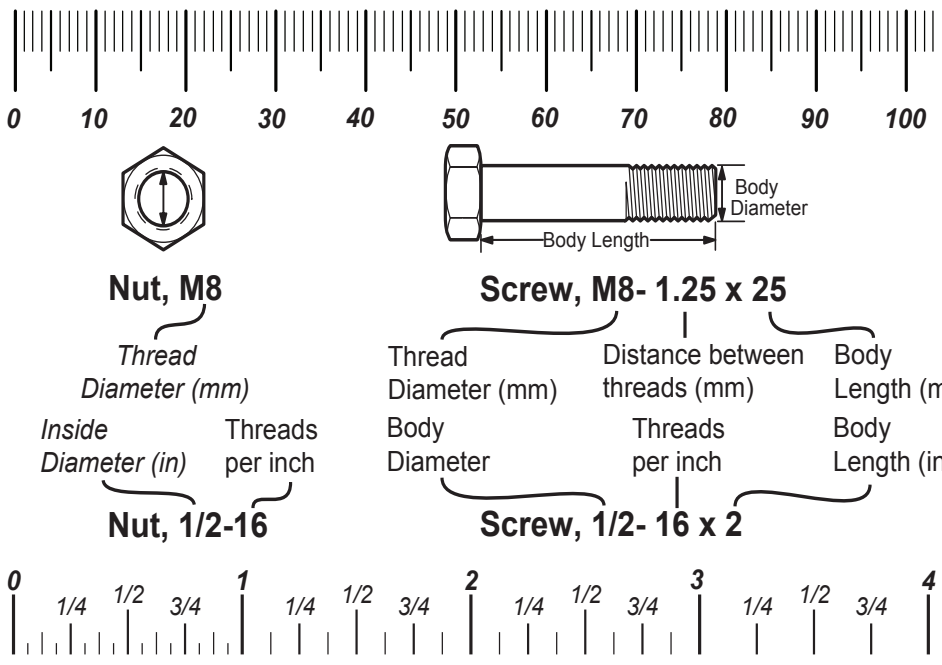

Standard Hardware Sizing

When a washer or nut is identified as **1/2"** (M8), this is the *Nominal size*, meaning the *inside diameter* is 1/2 inch (8mm metric thread diameter); if a second number is present it represents the *threads per inch* (distance between threads).

When bolt or capscrew is identified as **1/2 - 16 x 2"** (M8 - 1.25 x 50), this means the *Nominal size*, or body diameter is 1/2 inch (8mm metric thread diameter), the second number,16, represents the *threads per inch, (distance between threads).* The final number is the body length of the bolt or screw, 2 inches (50mm).

Torque Specification Chart

FOR STANDARD MACHINE HARDWARE (Tolerance ± 20%)

Hardware Grade	No Marks SAE Grade 2		SAE Grade 5		SAE Grade 8	
Size Of Hardware	*in/lbs* **ft/lbs**	Nm.	*in/lbs* **ft/lbs**	Nm.	*in/lbs* **ft/lbs**	Nm.
8-32	*19*	2.1	*30*	3.4	*41*	4.6
8-36	*20*	2.3	*31*	3.5	*43*	4.9
10-24	*27*	3.1	*43*	4.9	*60*	6.8
10-32	*31*	3.5	*49*	5.5	*68*	7.7
1/4-20	*66*	7.6	**8**	10.9	**12**	16.3
1/4-28	*76*	8.6	**10**	13.6	**14**	19.0
5/16-18	**11**	15.0	**17**	23.1	**25**	34.0
5/16-24	**12**	16.3	**19**	25.8	**29**	34.0
3/8-16	**20**	27.2	**30**	40.8	**45**	61.2
3/8-24	**23**	31.3	**35**	47.6	**50**	68.0
7/16-14	**30**	40.8	**50**	68.0	**70**	95.2
7/16-20	**35**	47.6	**55**	74.8	**80**	108.8
1/2-13	**50**	68.0	**75**	102.0	**110**	149.6
1/2-20	**55**	74.8	**90**	122.4	**120**	163.2
9/16-12	**65**	88.4	**110**	149.6	**150**	204.0
9/16-18	**75**	102.0	**120**	163.2	**170**	231.2
5/8-11	**90**	122.4	**150**	204.0	**220**	299.2
5/8-18	**100**	136	**180**	244.8	**240**	326.4
3/4-10	**160**	217.6	**260**	353.6	**386**	525.0
3/4-16	**180**	244.8	**300**	408.0	**420**	571.2
7/8-9	**140**	190.4	**400**	544.0	**600**	816.0
7/8-14	**155**	210.8	**440**	598.4	**660**	897.6
1-8	**220**	299.2	**580**	788.8	**900**	1,244.0
1-12	**240**	326.4	**640**	870.4	**1,000**	1,360.0

NOTES

1. These torque values are to be used for all hardware excluding: locknuts, self-tapping screws, thread forming screws, sheet metal screws and socket head setscrews.
2. Recommended seating torque values for locknuts:
   a. for prevailing torque locknuts - use 65% of grade 5 torques.
   b. for flange whizlock nuts and screws - use 135% of grade 5 torques.
3. Unless otherwise noted on assembly drawings, all torque values must meet this specification.

Common Hardware Types

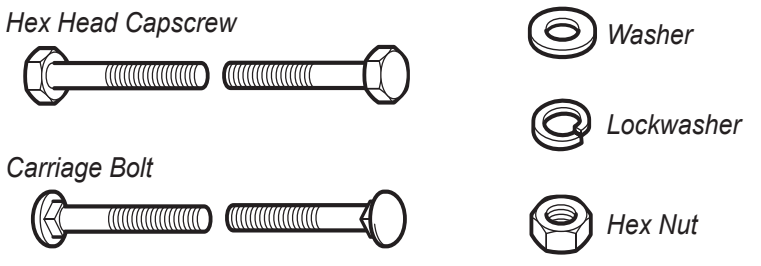

Wrench & Fastener Size Guide

1/4" Bolt or Nut Wrench—7/16"

5/16" Bolt or Nut Wrench—1/2"

3/8" Bolt or Nut Wrench—9/16"

7/16" Bolt or Nut Wrench (Bolt)—5/8" Wrench (Nut)—11/16"

1/2" Bolt or Nut Wrench—3/4"

M6 Bolt or Nut Wrench—10mm

M8 Bolt or Nut Wrench—13mm

M10 Bolt or Nut Wrench—17mm

M12 Bolt or Nut Wrench—19mm

M14 Bolt or Nut Wrench—22 mm

Copyright © Briggs & Stratton. All Rights reserved