Parts Manual

Mfg. No: 1019-0
7,500 EXL

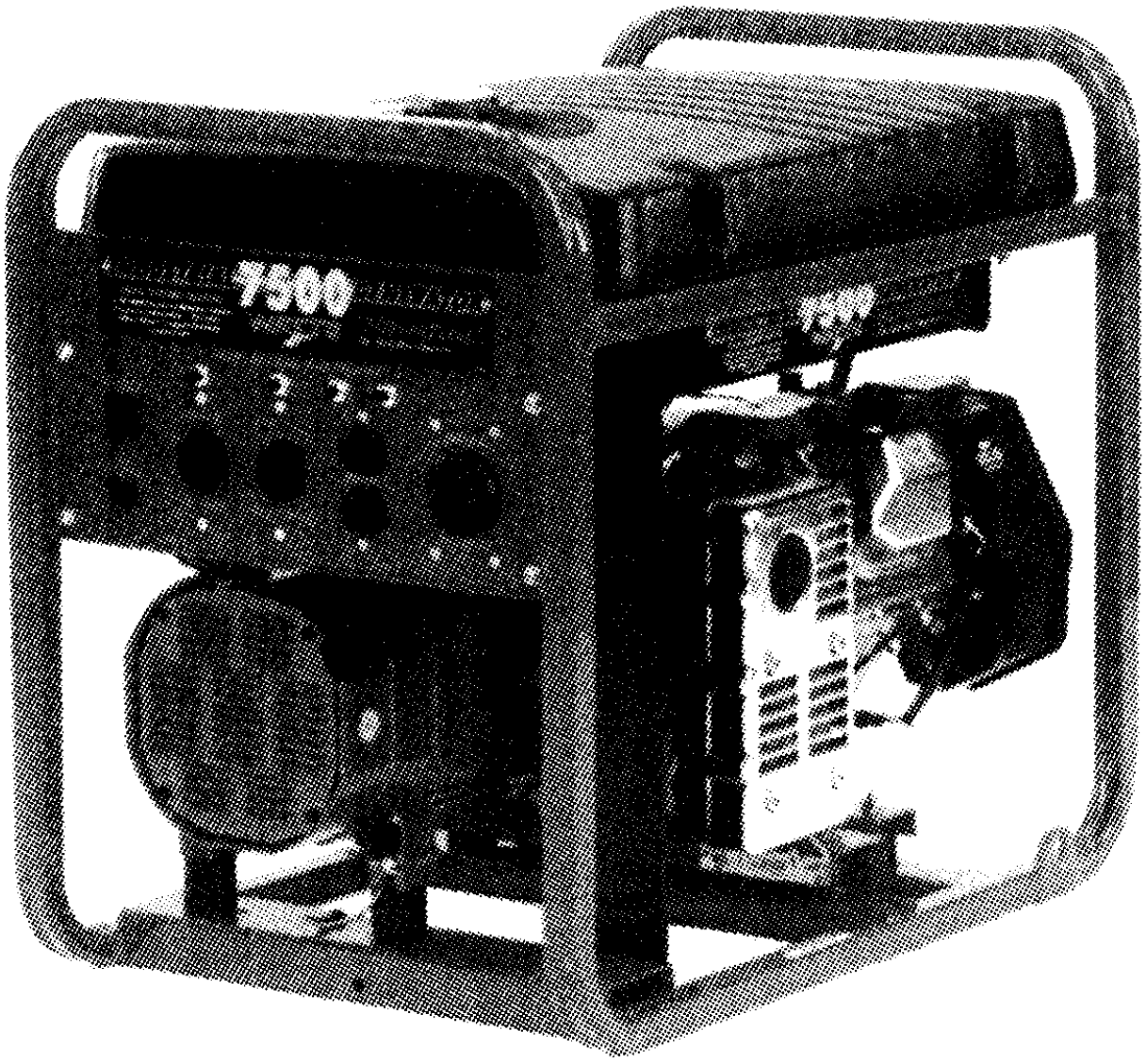

Copyright © Briggs & Stratton. All Rights reserved

Model Components

Page

Control Panel. 4
Electrical Data. 6
Generator. 8
Torque Specification Chart. 12

Not For Reproduction

Copyright © Briggs & Stratton. All Rights reserved

Control Panel

Note: Unless noted otherwise, use the standard torque specifications

Mfg. No: 1019-0

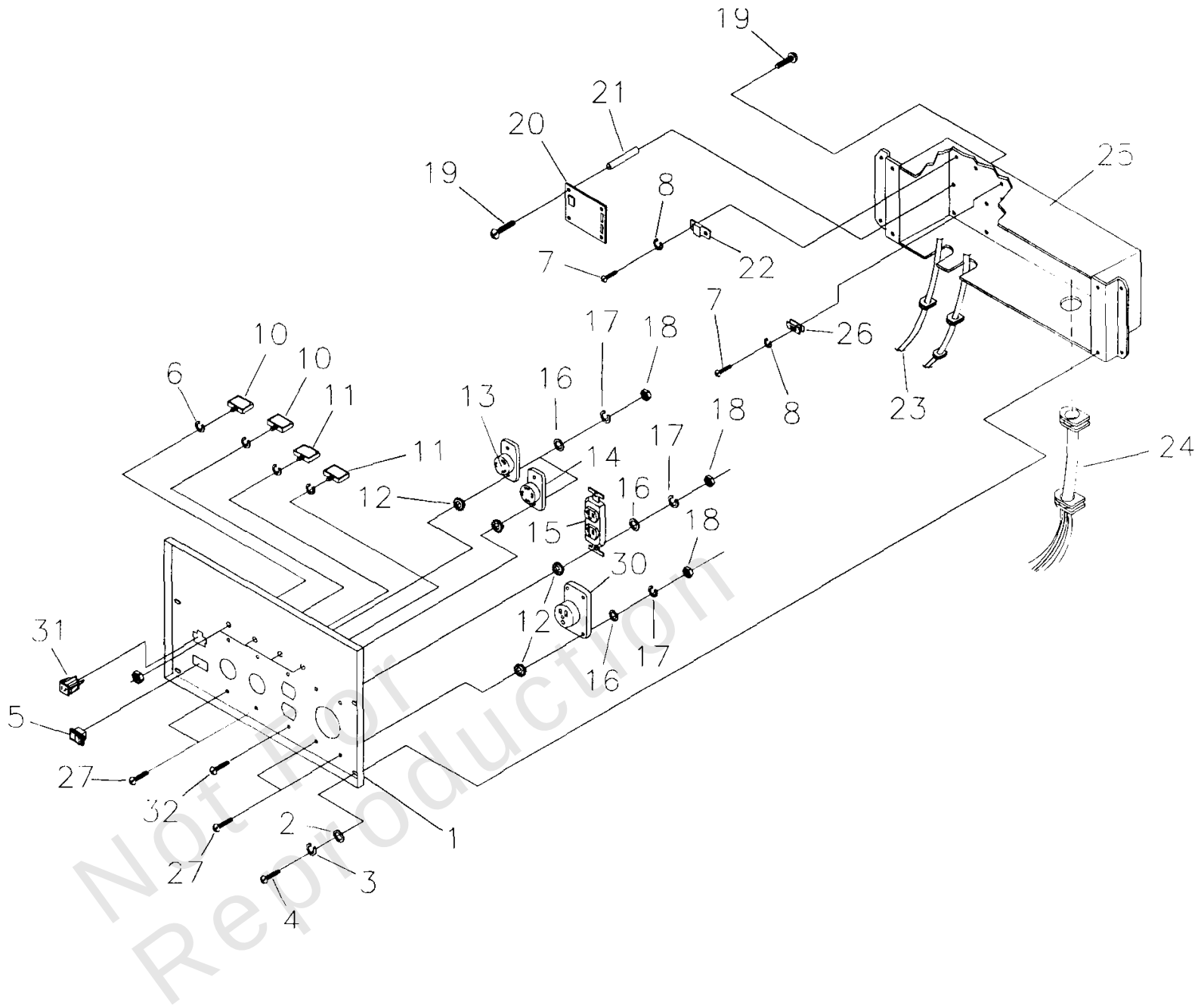

Not for Reproduction

Copyright © Briggs & Stratton. All Rights reserved

Control Panel

REF NO	PART NO	QTY	DESCRIPTION
1	B1331GS	1	PANEL, Control
2	23897GS	4	WASHER, #10 M5 Flat
3	49226GS	4	WASHER, M5 Lock
4	91526GS	4	SCREW, M5-0.8 x 12 mm
5	82538GS	1	SWITCH, Idle Control
6	82881GS	4	WASHER, 7/16" Int Lock
7	43181GS	4	SCREW, M3-0.5 x 10mm
8	43182GS	4	WASHER, M3 Lock
10	75207AGS	2	CIRCUIT BREAKER, 30 AMP
11	75207GS	2	CIRCUIT BREAKER, 20 AMP
12	23365GS	10	WASHER, #8 Shakeproof
13	68868GS	1	OUTLET, 30A, 120V Locking Type
14	43437GS	1	OUTLET, 30A, 120V/240V Locking Type
15	68759GS	1	OUTLET, 20A,120V
16	43180GS	10	WASHER, M4 Flat
17	22264GS	10	WASHER, #8 M4 Lock
18	51715GS	10	NUT, M4-0.7 Hex
19	64526GS	8	SCREW, #6-32 x 3/8"
20	83970GS	1	BOARD, System Control
21	64525GS	4	3/4" Hex Standoff
22	87962GS	1	CIRCUIT BREAKER, 10A (Automatic), 12V
23	84335GS	1	ASSEMBLY, Wire Harness
24	84134GS	1	GROMMET, Rubber Connector
25	92069GS	1	BOX, Control Panel
26	84028GS	1	TRANSFORMER, Idle Control
27	75475GS	9	SCREW, M4-0.7x10mm
30	74191GS	1	OUTLET, 50A, 240V
31	90418GS	1	OUTLET, 10A, 12VDC
32	75476GS	1	PPHMS, M4-0.7 x 16

Not For Reproduction

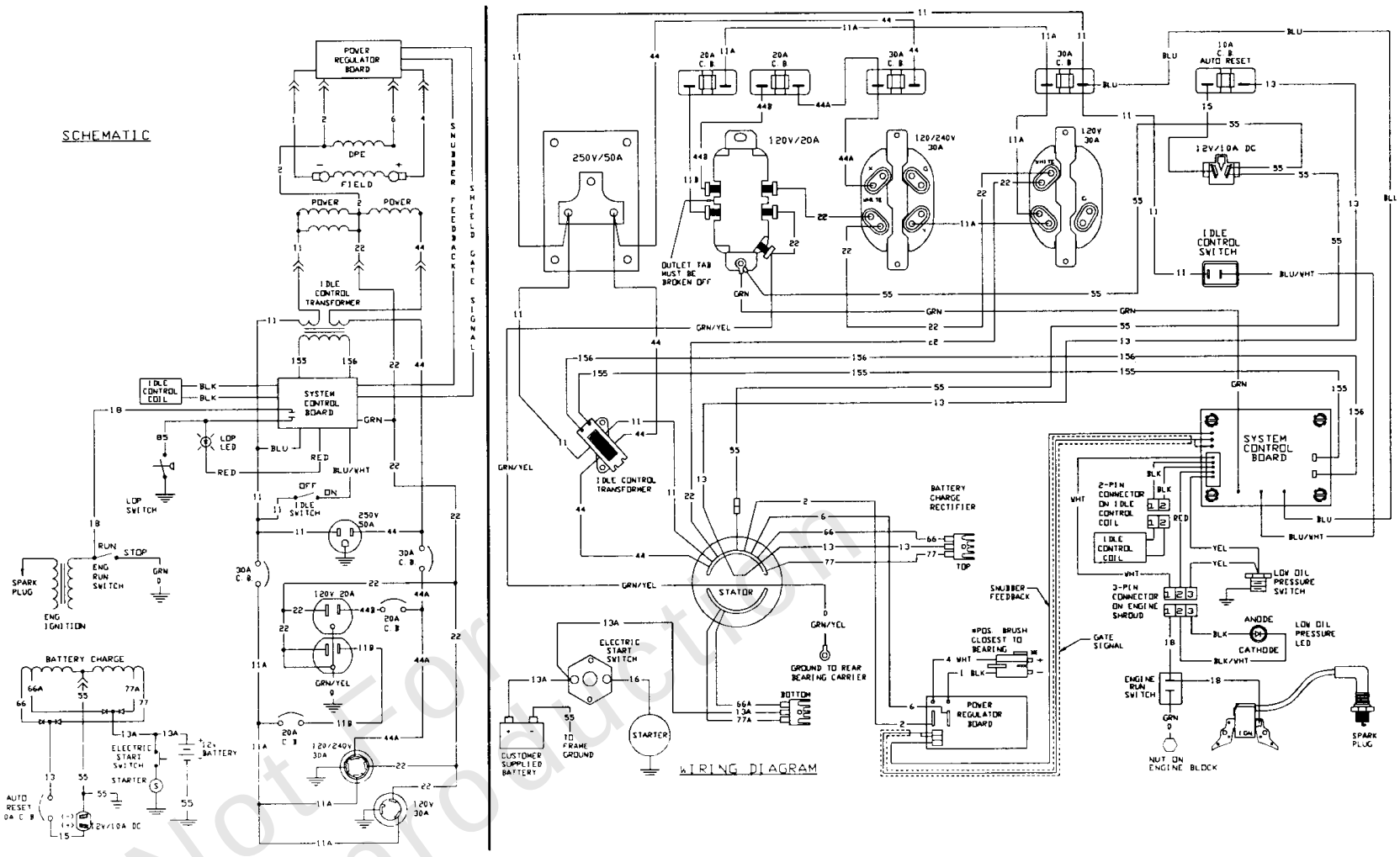

Not For Reproduction

Electrical Data

REF NO	PART NO	QTY	DESCRIPTION
--	-----		Wiring Diagram/Schematic only
--	-----		WARNING - Generator Voltage Could Cause Electrical Shock or Burn Resulting in Death Or Serious Injury. To Avoid Electrical Shock Or Burn Hazard, Please Refer Service To Qualified Personnel.

Not For Reproduction

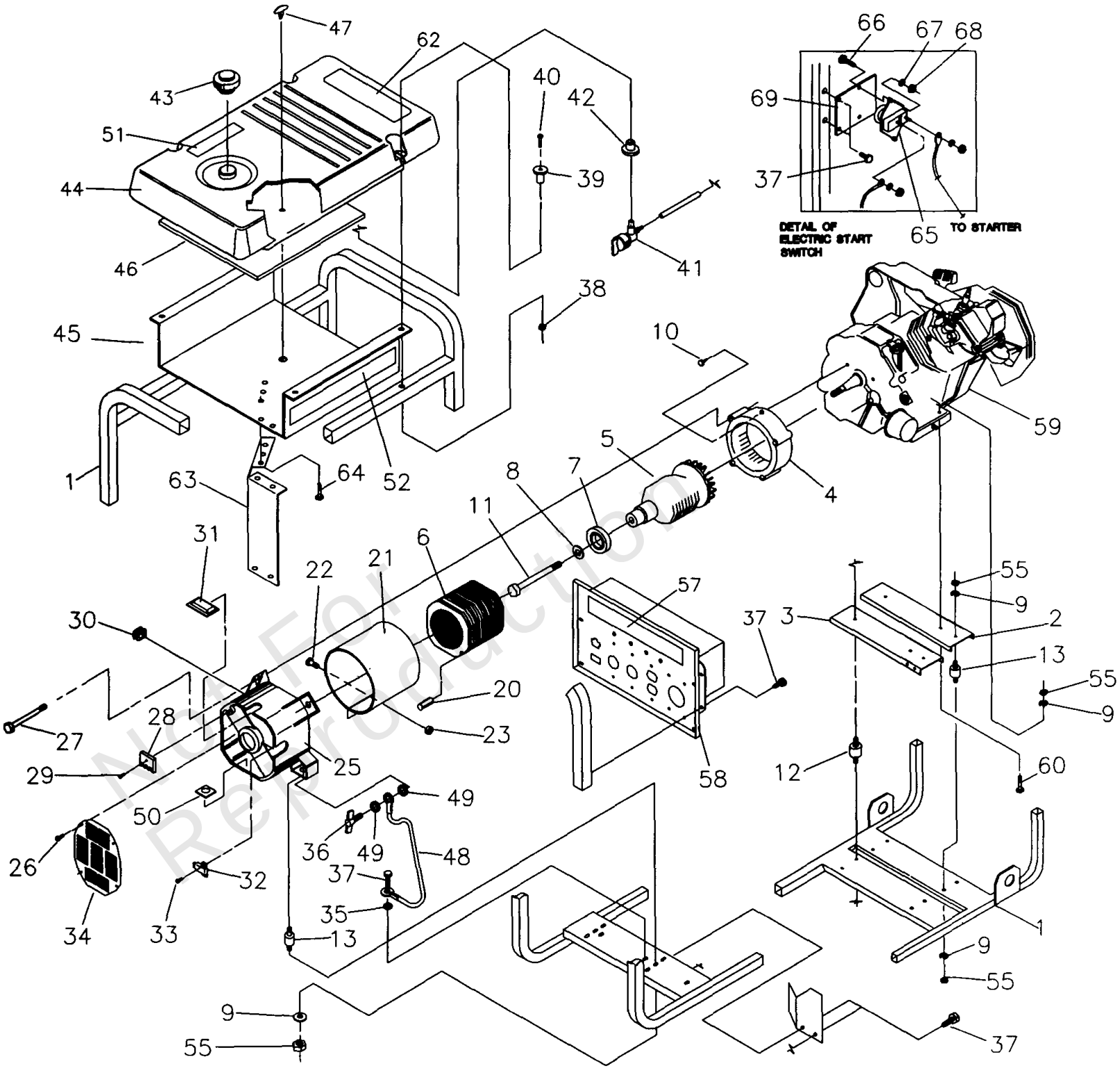

Not For Reproduction

Generator

REF NO	PART NO	QTY	DESCRIPTION
1	92432GS	1	CRADLE
2	92531GS	1	SUPPORT, ENGINE
3	92731GS	1	SUPPORT, ENGINE & MUFFLER
4	92247GS	1	HOUSING, ENGINE ADAPTER
5	B1342GS	1	ASSEMBLY, ROTOR
6	B1897GS	1	ASSEMBLY, STATOR
7	65791GS	1	BEARING
8	67451GS	1	WASHER, SPECIAL FLAT - M8
9	22129GS	10	WASHER, LOCK - M8
10	86307GS	4	HHMS, 5/16-24 x 3/4 LG. SEMS
11	47481GS	1	HHCS, 5/16-24 x 10.625 LG.
12	92069GS	2	MOUNT, VIBRATION
13	82857GS	4	MOUNT, VIBRATION
20	81917GS	1	PIN, ROLL 4MM x 10
21	81887JGS	1	WRAP, STATOR
22	52618GS	2	HHCS, M5-0.8 x 12 LG
23	52856GS	2	NUT, LOCKING-M5
25	66825CGS	1	CARRIER, REAR BEARING
26	74908GS	4	TAPTITE, M5-0.8 x 10 LG.
27	66449LGS	4	BOLT
28	65795GS	2	RECTIFIER, BATTERY CHARGE
29	66849CGS	1	TAPTITE, M5-0.8 x 30 LG.
30	67022GS	1	GROMMET, RUBBER
31	84132GS	1	ASSEMBLY, POWER REGULATOR
32	66386GS	1	ASSEMBLY, BRUSH HOLDER
33	66849GS	2	TAPTITE, M6-0.8 x 16 LG.
34	78388GS	1	COVER, BEARING CARRIER
35	22769GS	1	WASHER, SHAKE PROOF INT.# 10
36	86494GS	1	SCREW, M6-1.0 x 16 LG. WING
37	86292GS	9	HHCS,-#10 SELF DRILLER
38	77395GS	4	NUT, FLANGE LOCK - M6
39	83465GS	4	GROMMET, TANK
40	78831BGS	4	HHMS, M6-1.0 x 60 (BLACK)
41	80270GS	1	VALVE, TANK
42	78299GS	1	BUSHING, PLASTIC TANK
43	90878GS	1	CAP, FUEL
44	93595GS	1	TANK, FUEL
45	92039GS	1	SHIELD, HEAT
46	92665GS	1	INSULATION, # 2-1/4" THICK
47	85000GS	1	CLIP, INSULATION
48	14353621GS	1	WIRE, GROUND
49	26850GS	2	WASHER, Ext. M6 - 1/4" Shakeproof
50	57593GS	1	MOUNT, CABLE TIE
51	92982GS	1	DECAL, DANGER
52	B2165GS	2	DECAL, HEAT SHIELD
55	25244GS	12	NUT, 5/16-18 HEX
57	B2166GS	1	DECAL, CONTROL PANEL
58	B1332GS	1	ASSEMBLY, CONTROL BOX
59	~NSP	1	ENGINE, 15 HP. GPS.
60	22531GS	2	HHCS, 5/16-18 x 1-3/4" LG.
62	93826GS	1	DECAL, START INSTRUCTIONS

Not For Reproduction

Note: Unless noted otherwise, use the standard torque specifications Mfg. No: 1019-0

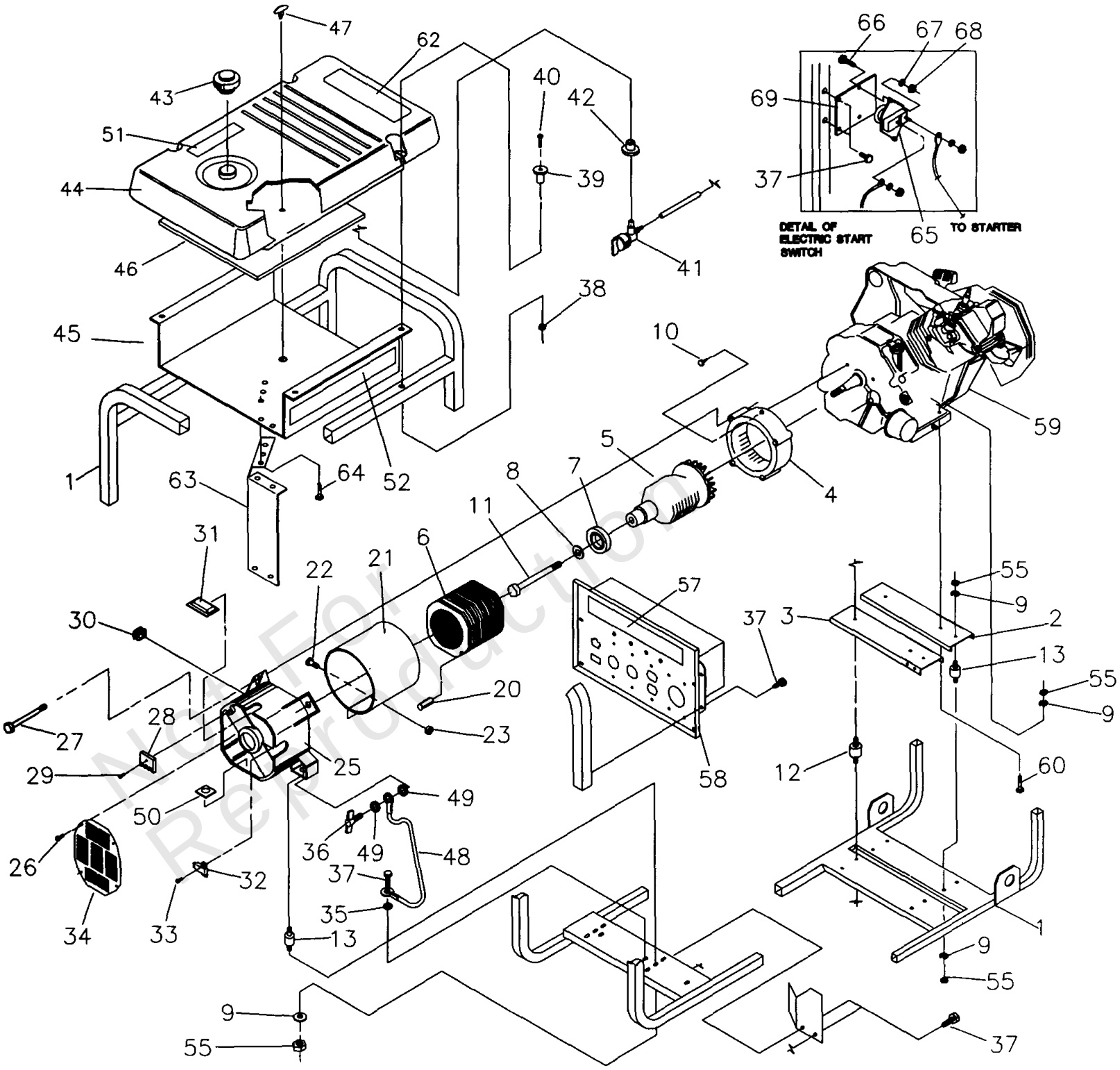

Not For Reproduction

Generator

REF NO	PART NO	QTY	DESCRIPTION
63	96068GS	1	SHIELD, HEAT
64	56893GS	5	CRIMPTITE, 10-24 x 1/2
65	77282GS	1	SWITCH, STARTER
66	22287GS	2	SCREW, 1/4-20 x 3/4
67	22097GS	2	WASHER
68	22127GS	2	NUT, Hex, 1/4-20
69	78289GS	1	BRACKET, STARTER SWITCH

Not For Reproduction

Copyright © Briggs & Stratton. All Rights reserved

Hardware Identification & Torque Specifications

Torque Specification Chart

FOR STANDARD METRIC MACHINE HARDWARE (Tolerance ± 20%)

Property Class	5.6 Class 5.6		8.8 Class 8.8		10.9 Class 10.9		12.9 Class 12.9	
Size Of Hardware	*in/lbs* **ft/lbs**	Nm.	*in/lbs* **ft/lbs**	Nm.	*in/lbs* **ft/lbs**	Nm.	*in/lbs* **ft/lbs**	Nm.
M3	*5.88*	*.56*	*13.44*	*1.28*	*19.2*	*1.80*	*22.92*	2.15
M4	*13.44*	*1.28*	*30.72*	*2.90*	*43.44*	*4.10*	*52.56*	4.95
M5	*26.4*	*2.50*	*60.96*	*5.75*	**5.97**	*8.10*	**7.15**	9.7
M6	*44.64*	*4.3*	**7.3**	*9.9*	**10.3**	*14*	**12.1**	16.5
M7	**5.2**	*7.1*	**12.1**	*16.5*	**16.9**	*23*	**19.9**	27
M8	**7.7**	*10.5*	**17.7**	*24*	**25**	*34*	**29**	40
M10	**15**	*21*	**35**	*48*	**50**	*67*	**59**	81
M12	**26**	*36*	**61**	*83*	**86.2**	*117*	**103**	140
M14	**42**	*58*	**101**	*132*	**136**	*185*	**162**	220
M16	**64**	*88*	**147**	*200*	**210**	*285*	**250**	340
M18	**89**	*121*	**202**	*275*	**287**	*390*	**346**	470
M20	**126**	*171*	**290**	*390*	**405**	*550*	**486**	660
M22	**169**	*230*	**390**	*530*	**559**	*745*	**656**	890
M24	**217**	*295*	**497**	*375*	**708**	*960*	**840**	1140
M27	**320**	*435*	**733**	*995*	**1032**	*1400*	**1239**	1680
M30	**435**	*590*	**995**	*1350*	**1401**	*1900*	**1681**	2280
M33	**590**	*800*	**1349**	*1830*	**1902**	*2580*	**2278**	3090
M36	**759**	*1030*	**1740**	*2360*	**2441**	*3310*	**2935**	3980
M39	**988**	*1340*	**2249**	*3050*	**3163**	*4290*	**3798**	5150

The guides and ruler furnished below are designed to help you select the appropriate hardware.

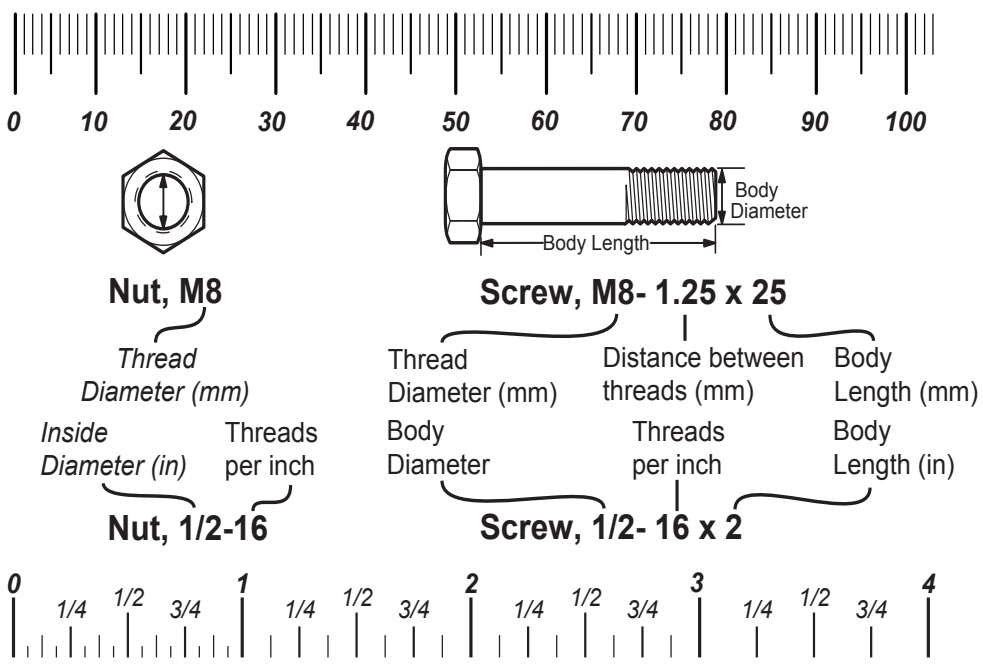

Standard Hardware Sizing

When a washer or nut is identified as **1/2"** (M8), this is the *Nominal size*, meaning the *inside diameter* is 1/2 inch (8mm metric thread diameter); if a second number is present it represents the *threads per inch* (distance between threads).

When bolt or capscrew is identified as **1/2 - 16 x 2"** (M8 - 1.25 x 50), this means the *Nominal size*, or body diameter is 1/2 inch (8mm metric thread diameter), the second number,16, represents the *threads per inch, (distance between threads).* The final number is the body length of the bolt or screw, 2 inches (50mm).

Torque Specification Chart

FOR STANDARD MACHINE HARDWARE (Tolerance ± 20%)

Hardware Grade	No Marks SAE Grade 2		SAE Grade 5		SAE Grade 8	
Size Of Hardware	*in/lbs* **ft/lbs**	Nm.	*in/lbs* **ft/lbs**	Nm.	*in/lbs* **ft/lbs**	Nm.
8-32	*19*	2.1	*30*	3.4	*41*	4.6
8-36	*20*	2.3	*31*	3.5	*43*	4.9
10-24	*27*	3.1	*43*	4.9	*60*	6.8
10-32	*31*	3.5	*49*	5.5	*68*	7.7
1/4-20	*66*	7.6	**8**	10.9	**12**	16.3
1/4-28	*76*	8.6	**10**	13.6	**14**	19.0
5/16-18	**11**	15.0	**17**	23.1	**25**	34.0
5/16-24	**12**	16.3	**19**	25.8	**29**	34.0
3/8-16	**20**	27.2	**30**	40.8	**45**	61.2
3/8-24	**23**	31.3	**35**	47.6	**50**	68.0
7/16-14	**30**	40.8	**50**	68.0	**70**	95.2
7/16-20	**35**	47.6	**55**	74.8	**80**	108.8
1/2-13	**50**	68.0	**75**	102.0	**110**	149.6
1/2-20	**55**	74.8	**90**	122.4	**120**	163.2
9/16-12	**65**	88.4	**110**	149.6	**150**	204.0
9/16-18	**75**	102.0	**120**	163.2	**170**	231.2
5/8-11	**90**	122.4	**150**	204.0	**220**	299.2
5/8-18	**100**	136	**180**	244.8	**240**	326.4
3/4-10	**160**	217.6	**260**	353.6	**386**	525.0
3/4-16	**180**	244.8	**300**	408.0	**420**	571.2
7/8-9	**140**	190.4	**400**	544.0	**600**	816.0
7/8-14	**155**	210.8	**440**	598.4	**660**	897.6
1-8	**220**	299.2	**580**	788.8	**900**	1,244.0
1-12	**240**	326.4	**640**	870.4	**1,000**	1,360.0

NOTES

1. These torque values are to be used for all hardware excluding: locknuts, self-tapping screws, thread forming screws, sheet metal screws and socket head setscrews.
2. Recommended seating torque values for locknuts:
   a. for prevailing torque locknuts - use 65% of grade 5 torques.
   b. for flange whizlock nuts and screws - use 135% of grade 5 torques.
3. Unless otherwise noted on assembly drawings, all torque values must meet this specification.

Common Hardware Types

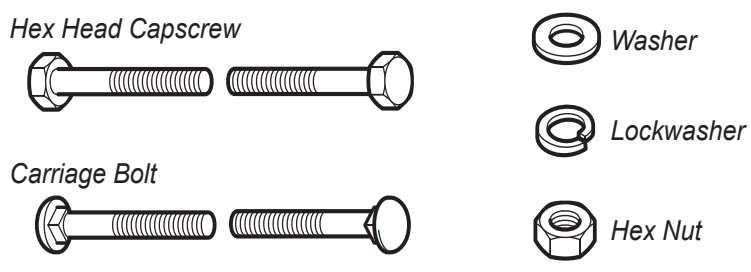

Wrench & Fastener Size Guide

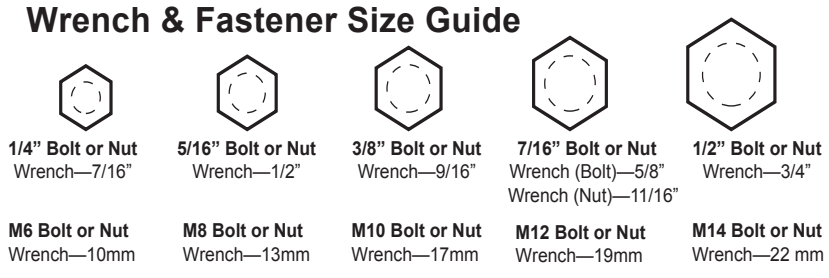

Copyright © Briggs & Stratton. All Rights reserved